AEROMODELLER ANNUAL

AEROMODELLER ANNUAL

A review of post-war aeromodelling throughout the world in theory and practice; together with useful data, contest results and authoritative articles, produced by staff and contributors of the *AEROMODELLER*

Compiled by
D. J. LAIDLAW-DICKSON

and Edited by
D. A. RUSSELL, M.I.MECH.E.

Published by

THE MODEL AERONAUTICAL PRESS, LTD.
ALLEN HOUSE, NEWARKE STREET
LEICESTER
1948

Distributors to the Book Trade

HORACE MARSHALL & SON LTD., LONDON, E.C. 4

Printed in Gt. Britain by

THE CROYDON TIMES, CROYDON, SURREY

CONTENTS

ROYAL RECOGNITION. Her Majesty the Queen hands the magnificent Queen's Cup to Phil Smith, of Bournemouth, first winner of what will undoubtedly be one of the star contests of future years. It is the hope of every aeromodeller that this royal visit will be but the first of many to a sport and pastime that can surely claim the cream of the nation's youth amongst its adherents.

INTRODUCTION

1948 IN RETROSPECT

THE year 1948 will long be remembered as noteworthy by aeromodellers, marking as it does the beginning of what we hope will be a new era for all those interested in the sport, hobby and pastime of model aeronautics. For it was in this year that Her Gracious Majesty The Queen gave permission for the annual award of a trophy to be known as " The Queen's Cup," and personally presented the magnificent silver-gilt prize to its first winner, Phil Smith of Bournemouth, on the occasion of Northern Heights annual gala at Langley Aerodrome. Such royal approval for this essentially virile and twentieth century hobby cannot but have favourable repercussions throughout the country. It is hoped that local authorities and others responsible for providing recreational facilities will see in this an appropriate example that they cannot do better than follow

In 1948, too, a British team travelled to the United States for the first time since 1939 to take part in that best known of all international model aircraft contests, The Wakefield Trophy. Thanks to the generosity of their many well-wishers and the enterprise of the Society of Model Aeronautical Engineers it was possible for a full team to fly over for the contest. Their efforts were well rewarded, for, with a magnificent series of flights, leading trials member Roy Chesterton brought back the trophy once more in British hands. Next year should see a strong European challenge, when the event takes place on British soil within easier reach of the many countries eager to participate.

Looking back in retrospect, the year has also been noteworthy as the first since the merger of the former Association of British Aeromodellers into the Society of Model Aeronautical Engineers, so that enthusiasts are once more united in a single body pressing forward for the well-being of all. Support for the Society's competitions has been greater than ever. The Nationals held at Sywell Aerodrome, near Northampton, indeed, represented so great an increase in entries that only a damaging wind saved the organisers from being swamped by numbers. This meeting was also the venue of the first British Control Line contest on a national scale, which served to indicate the growing interest in this phase of aeromodelling.

At Eaton Bray was staged the Third International Week—this for the first time under F.A.I. licence—when visitors from France, Belgium, Holland, Switzerland, Italy and Portugal met British visitors in friendly competition, with the approval and assistance of the governing body. Much still remains to make Eaton Bray a worthy centre for such international events, but the organisers have every hope that by next season improvements will have been made to meet the constructive criticism offered by visitors, and enable every one to enjoy added comforts and conveniences.

The trade, too, has struggled manfully despite peace-time difficulties to supply an ever increasing range of model equipment and accessories, both for the home market and for the ever present export drive. Diesel engine manufacturers have forged ahead, until there are now nearly forty varieties of motor available to the aeromodeller ranging in price from just over a pound upwards, in all sizes from miniatures of .2 c.c. capacity to over 5 c.c. Not content with filling an established need the more progressive firms have been quick to follow the American lead with hot-wire, or " glow-plug " engines, and a number of these are now on the market. In the same way American enthusiasm for the larger size of spark ignition engine has fired British manufacturers to produce a number of designs that after some initial trials may well prove to be the equal, if not the better, of many famous makes, known in the main only by hearsay in these Isles. Finally, a British jet engine has been produced, and as we go to press first announcements are appearing of those fascinating little CO_2 engines that serve as the bridge between rubber and power flying. Nor has the kit field been neglected—a plethora of new construction sets being available for those unable or unwilling to design their own models. In fact, for the first time, we can claim that British modellers are now as well served by the trade as any group anywhere in the world.

Such is the year that marks also the introduction of this, the first *Aeromodeller Annual*. We make no pretence of originality in the thought that inspired it, and take this opportunity of acknowledging our debt to such pioneers as Frank Zaic, who conceived the idea at a time when it was considerably harder to bring it to fruition. We acknowledge, too, the many valued contributions to its pages that we have received from our correspondents all over the world, and the many sources that we have unashamedly dipped into to make it as representative as possible. In this connection, we should like to name in particular our contemporaries overseas, *Air Trails, Model Airplane News, Modele Reduit d'Avion, L'Ala, Repules, Hobbyboken,* and apologise in advance to any publication whose name we may have omitted, whose columns have been gleaned to make our harvest. To our readers we would say that this is intended as an annual event, and their criticisms, comments, and contributions will help to make each successive number that much better. It is impossible to please everybody, but we have tried to include something of as much as possible ; if, alas, some favourite aspect has been treated sketchily, or not at all, please bear with us, and let us know what is wanted next time.

LOW SPEED AERODYNAMICS

by P. R. Payne

No startling innovations, but a very large development of ideas and methods : that is the sum of work done in 1948. And although a large number of modellers remain prejudiced against theoretical work—some because it is all too rarely intelligible, and some because results do not seem up to expectations—nevertheless a greater number are regarding design from a more logical point of view.

WING PLAN-FORM.

For all models there is a minimun hord if efficient operation is to be maintained (Nomogram N d it is usually found that the root chord of a normal model is r this value to permit any form of taper. Thus it is wisest to lel chord wings on all but the largest machines.

WING SECTION.

A selection of the best for model use is given later (page 30). Generally speaking, the best model sections fall into two categories : the L.S.A.R.A. "Laminar flow" series, developed by Walker and Annenberg, and the "Turbulent flow" type as exemplified by the Sigurd Isacson and Payne designs. Up to the moment, the latter have been winning most of the honours, but careful flight tests have shown the L.S.A.R.A. designs to be definitely superior if used intelligently. By this, it is meant that the wing must be carefully constructed and finished, with ribs and upper surface riblets spaced 10%—15% of the chord apart.

In addition, the wing/fuselage junction should be very carefully made : best results are obtained when the maximum fuselage thickness occurs near the wing trailing edge, and very small fillets are used. In addition, Walker recommends tip washout because of the more violent stall experienced with these sections.

Model Size	*Wing Section Type*
Small	Laminar flow
Medium	Turbulent flow or Laminar flow
Large	Turbulent flow
Very large	Orthodox

WING TIPS.

If a normal curved tip is used, its section should be made as thin as possible : Sigurd Isacson 73508 may be utilised for instance. Alternatively, an " end plate " may be fitted (Fig. 1). Tests on the relative merits of these two methods have so far been inconclusive.

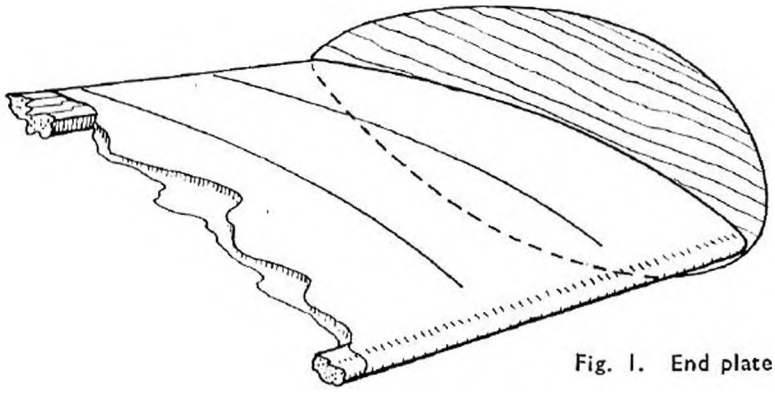

Fig. 1. End plate

FUSELAGE.

It is not generally realised that the fuselage has a very definite effect on lateral stability. With the normal type a relatively large dihedral angle and fin are needed, but if the fuselage is designed to have a large " forward fin " both these values may be considerably reduced, and the performance improved thereby.

The " flying axe " or " suitcase " design, pioneered by Annenberg, is probably the best compromise for gliders, with the " pod and boom " type as a close runner up. Both layouts are shown in Fig. 2. For power models of course, the faithful pylon provides the classic example, but the " Jaguar " layout is also suitable.

WING ANGLE OF INCIDENCE.

For every wing section there is one—and only one—angle of attack for most efficient operation. If this is known for infinite aspect ratio, the induced angle of attack may be found from Nomogram No. 2, and the sum of the two angles is that at which the wing must be built into the fuselage. Typical values are as follows :—

Aerofoil Section	L.D.C.2	N.60	Gott 625	Flat plate	Curved plate 417a
Optimum C_L	0.8	0.7	0.5	0.4	0.8
Angle of attack	+2.7°	+1.0°	—3.0°	+4.0°	+3.3°
Critical V_L	—	13.3	20.0	less than 6	
C.P. position	58%	36%	56%	25%	37%
Light/Drag	32.0	25.0	16.7	10	32.0
Thickness/chord	10%	12.4%	20%	2.9%	2.9%

TAILPLANE.

Tailplane area is given by Nomogram No. 4, and the best section for small and medium models is a flat plate, although thin symmetrical sections such as S.I. 03010 may be used with the larger sizes. Its angle of incidence may be easily obtained with a Nomogram (see *Model Sailplane Design* by P. R. Payne) but space precludes its inclusion here.

The horizontal position is of considerable importance, particularly with laminar flow wing sections, because of the " wake " of slow moving and turbulent air behind the wing. Roughly speaking, this wake is bounded by a line drawn from the highest point of the section, parallel to the undisturbed airflow. The lower limit is given by another line at an angle from this, the angle being equal to the downwash angle (Nomogram No. 3), and the line produced from the trailing edge. If the tailplane is outside these limits its efficient operation is assured.

FIN AREA AND WING DIHEDRAL.

As mentioned above, these values are closely tied up with fuselage design. The precise values *can* be calculated, and a simplified method is given in an L.S.A.R.A. report which has, however, not yet been released. At the moment, the general method of using a sheet fin for the trial flights and cutting it down until maximum stability is achieved, cannot well be bettered. In this connection it is interesting to note that any faults present in a model show up most clearly if it is flown on a tow line like a glider.

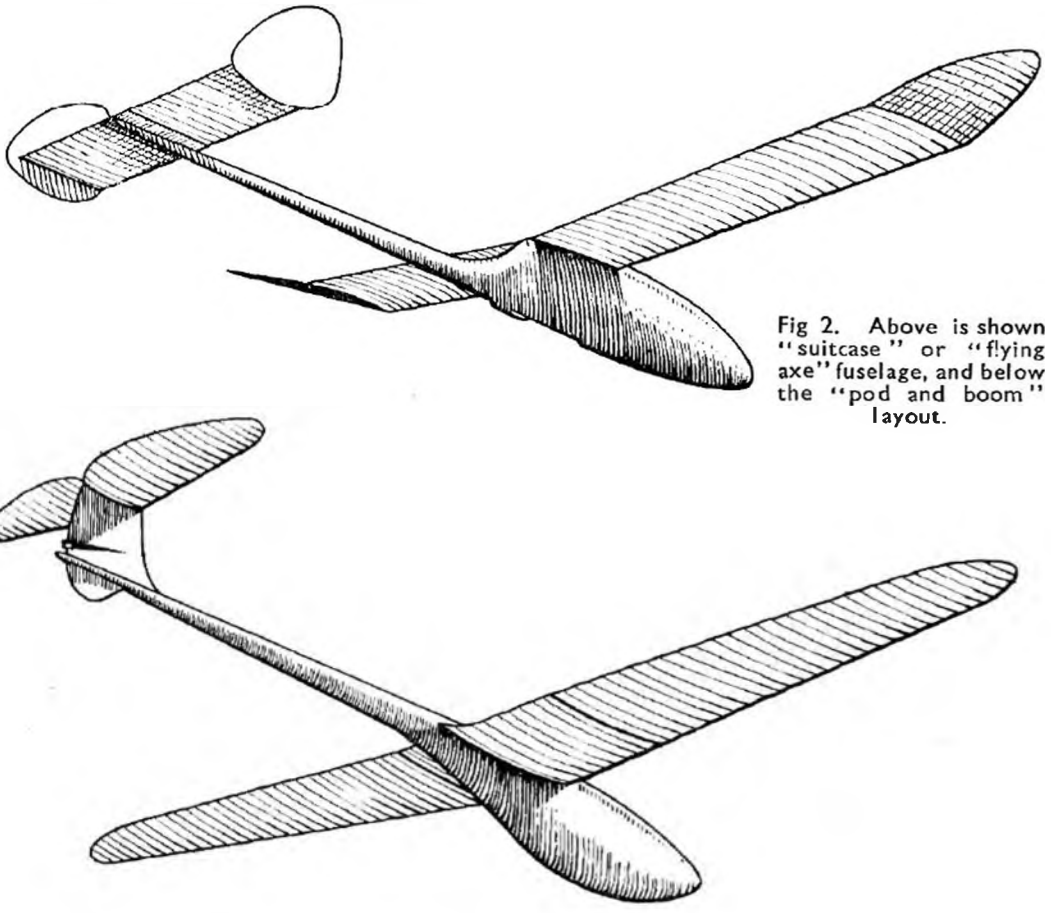

Fig 2. Above is shown "suitcase" or "flying axe" fuselage, and below the "pod and boom" layout.

AIRSCREWS.

Nineteen-forty-eight has seen the adoption of the "Non-helical pitch" theory as a tenable proposition, and the development of new blade sections. Moreover, knowledge of the subject has advanced to the stage where a design takes two hours instead of five minutes! But although airscrew theory is probably the most complicated in aerodynamics, more is known about it at model speeds than of any other subject.

The Payne blade section used in the *Aeromodeller* N.H.P. airscrews has resulted in a considerable improvement in efficiency: not because of its low "critical VL" as generally supposed (although this may assume some importance near the hub), but largely because of its good lift/drag ratio. A disadvantage is the low stalling angle: this means that under static conditions the blade near the hub is almost invariably stalled, resulting in an adverse effect on the rest of the blade. The fact that *Aeromodeller* airscrews invariably generate more static thrust than their orthodox counterparts, speaks eloquently for their general efficiency.

STABILITY.

Nearly all the important work in this country has been done by the L.S.A.R.A., and it is now possible to estimate the stability of a projected model with a high degree of accuracy.

In the first part of his report on lateral stability, Walker gives the following cures for bad behaviour on the tow line:

> *Spiral Instability* (turning rapidly away from the line of tow) is mainly due to insufficient dihedral.
>
> The obvious cure is to increase it, but other corrective measures include "washing out" the wing tips, adding a "forward fin" and reducing fin area.
>
> *Oscillatory Instability* (hunting from side to side) is due to excessive dihedral or too small a fin, but it is advisable to check the position of the tow-hook before increasing the fin area. It is inadvisable to reduce the dihedral, as this may lead to spiral instability.

WEIGHT.

Generally speaking, a light power model will have a better still air duration than a heavy one, because of the improvement in the climb. With a sailplane, however, increasing weight will increase the flying speed, which will in turn enable a smaller wing chord to be used (see minimum wing chord Nomogram No. 1). For a given wing area, then, increasing weight will result in an increased wing aspect ratio, and a consequential reduction in induced drag. The writer has found that minimum sinking speed occurs when the induced drag is equal to profile drag, other factors being constant (Nomogram No. 10), but for general purposes it is sufficient to say that all-up weight of a glider is immaterial provided that the wing chord is near its permissible minimum value.

CONTROL LINE MODELS.

With the exception of airscrew design, the only improvements

which have been effected in this sphere are smoother contours, better engine cowling, and lower all-up weight. Orthodox symmetrical wing sections are generally the most useful, thick ones being used for stunt models and thin ones for speed.

THE "FLYING BRICK" THEORY.

Centrifugal force has comparatively little effect on the normal stunt machine, but its effects can be considerable with a speed model. Unless the speed is infinitely great, it is impossible for the model to reach the height of the controller's hand, but it is quite usual to rise within a foot or so of it with the wing at zero lift. The exact vertical distance in feet is given by the formula—

$$\text{height} = \frac{(\text{Length of line} + \text{half wing span})^2}{(\text{Speed in m.p.h.})^2} \times 15.0$$

For a typical example, the lines are 68ft. long, the speed 150 m.p.h., and the model could rise to between one and two feet from the ground without the assistance of wings.

On a smaller line, say 30ft., this model would rise to within 7.2ins. of the controller's hand, and would require a ground speed of 55 m.p.h. before it could leave its dolly.

BIBLIOGRAPHY.

ELEMENTARY AERODYNAMICS.

Flight without Formulae	Kermode	Pitman
Mechanics of Flight	Kermode	Pitman
Simple Aerodynamics	Smith	Harborough
Model Airplane Design	Grant	Air Age Publrs. (New York)
Modellplan Konstruktion	Isacson	Lindqvists Forlag. (Stockholm)
Model Sailplane Design	Payne	Marshall

ADVANCED AERODYNAMICS.

Elementary Applied Aerodynamics	Whitlock	Oxford
Konstruktion Aerodynamika Letadel	Hosek	O/P
Aerodynamik des Flugmodel	Schmitz	O/P

(The original book is unobtainable, but a translation has been made by R.T.P./T.I.B. at the Ministry of Supply. L.S.A.R.A. members can borrow copies from Headquarters.)

Applied Aerodynamics	Bairstow	Longmans

ADDITIONAL BOOKS.

Those given above cover adequately the present knowledge of the subject whilst new work is dealt with in L.S.A.R.A. Technical Reports. In addition, the following books are also available in Great Britain :—

Aerodynamics Analysed	Bowden	Harborough
Airfoil Sections	Warring	Harborough
Model Gliders	Warring	Harborough

NOMOGRAMS

(No. 1) MINIMUM WING CHORD

FOR all aerofoil sections except the L.S.A.R.A. laminar flow series, there is a definite lower limit to chord sizes. Usually this limit is fairly high for the most generally used sections in this country, as they are mainly of the 10%—15% thick variety. A very rough rule gives this minimum value as half the percentage thickness, in inches. Thus the 12% thick N.A.C.A. 6512 should not be less than about 6 inches, and Gottingen 382 not less than 7½ inches.

From this it is easy to find a reason for the excellent performance of continental models, equipped as they are with very thin wing sections, which are always operating above their minimum values. With many British models, on the other hand, the wing chord, or part of it, is too small for the thickness of the section used, and the result is a breakaway of the air from the surface, low lift and high drag.

Nomogram No. 1 gives an exact value for this critical factor once the "critical VL" is known. Some typical examples of critical VL are given on page 8; and the subject dealt with more fully in Aerofoil Sections (page 30).

(No. 2) INDUCED ANGLE OF ATTACK.

In the "Low Speed Aerodynamics" section, an "Aerofoil Performance Table" is given, and among other factors, an "optimum angle of attack" for several sections. When knowledge of the subject is sufficiently far advanced, this can be extended to include all those of use to the aeromodeller, but at the moment the angle can only be estimated by comparison with known sections, and the optimum $C_L = 0.8 - t/7$ where t = thickness per cent.

Having estimated the C_L, knowing the aspect ratio of the projected wing from Nomogram No. 1, it is an easy matter to find the induced angles of attack from No. 2. This is then added to the previously estimated angle for infinite Aspect Ratio, and the sum is the angle at which the wing must be set to the fuselage datum line.

(No. 3) DOWNWASH ANGLE.

The air leaving the trailing edge of a wing is deflected downwards: this phenomenon is really the simplest explanation of why a wing generates lift, since Newton's principle of "equal and opposite reactions" holds true in all dynamics. In this case, a wing accelerates air downwards, and is consequently subjected to a lift force in the opposite direction, equal in magnitude to that required to divert the airflow. Since the actual cause of downwash—like the subject of the preceding Nomogram—is tied up with the complex three-dimensional flow round a real or "finite" aerofoil, as we call it (as opposed to the hypothetical but very useful aerofoil of "infinite" aspect ratio) we have to fall back on empirical formulae to give us an approximate answer. This particular one applies to the downwash angle at the tailplane, and is sufficiently accurate for all normal purposes.

The tailplane angle of attack can be found by subtracting the downwash angle from its angle of incidence.

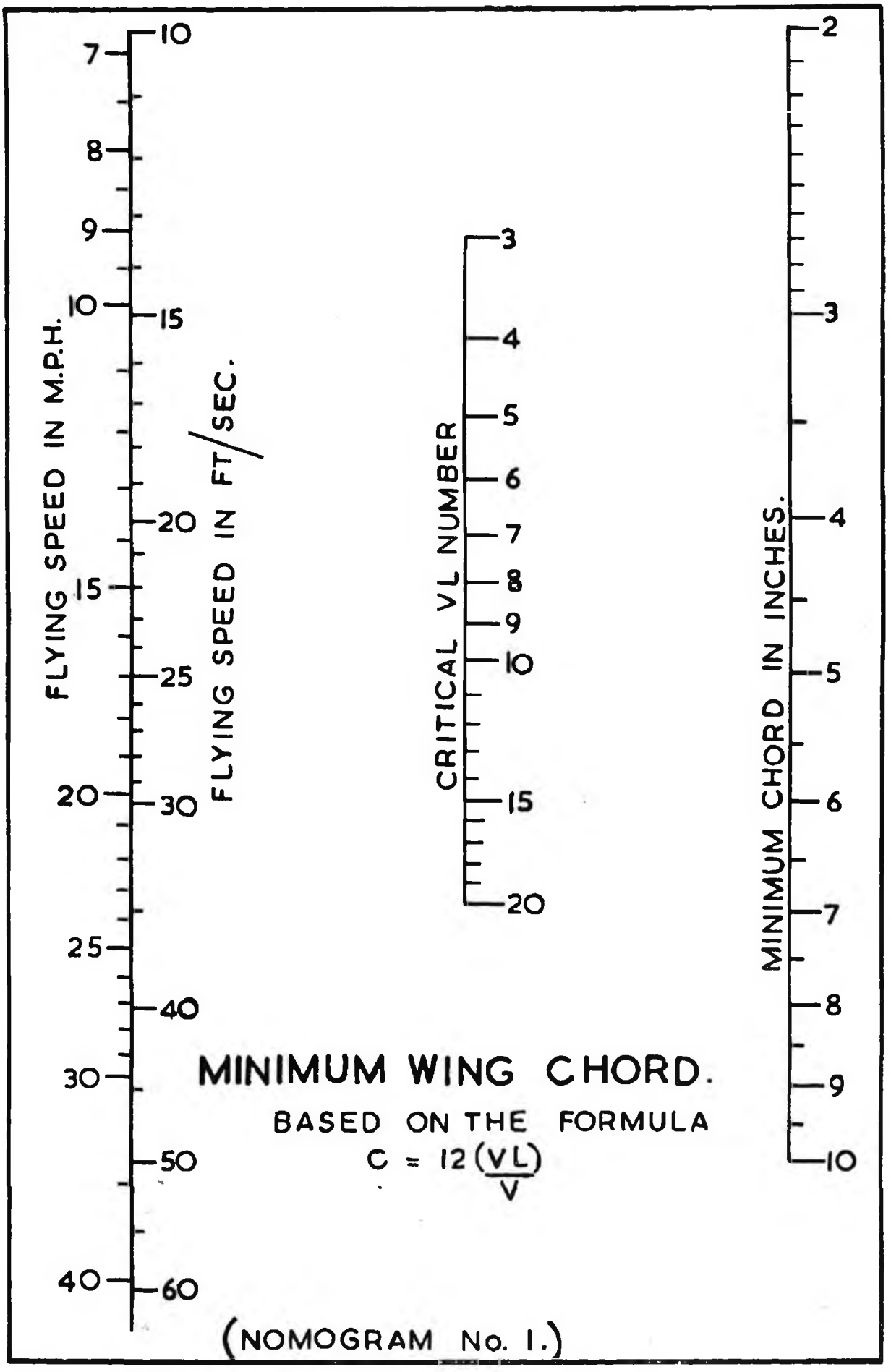

(NOMOGRAM No. 1.)

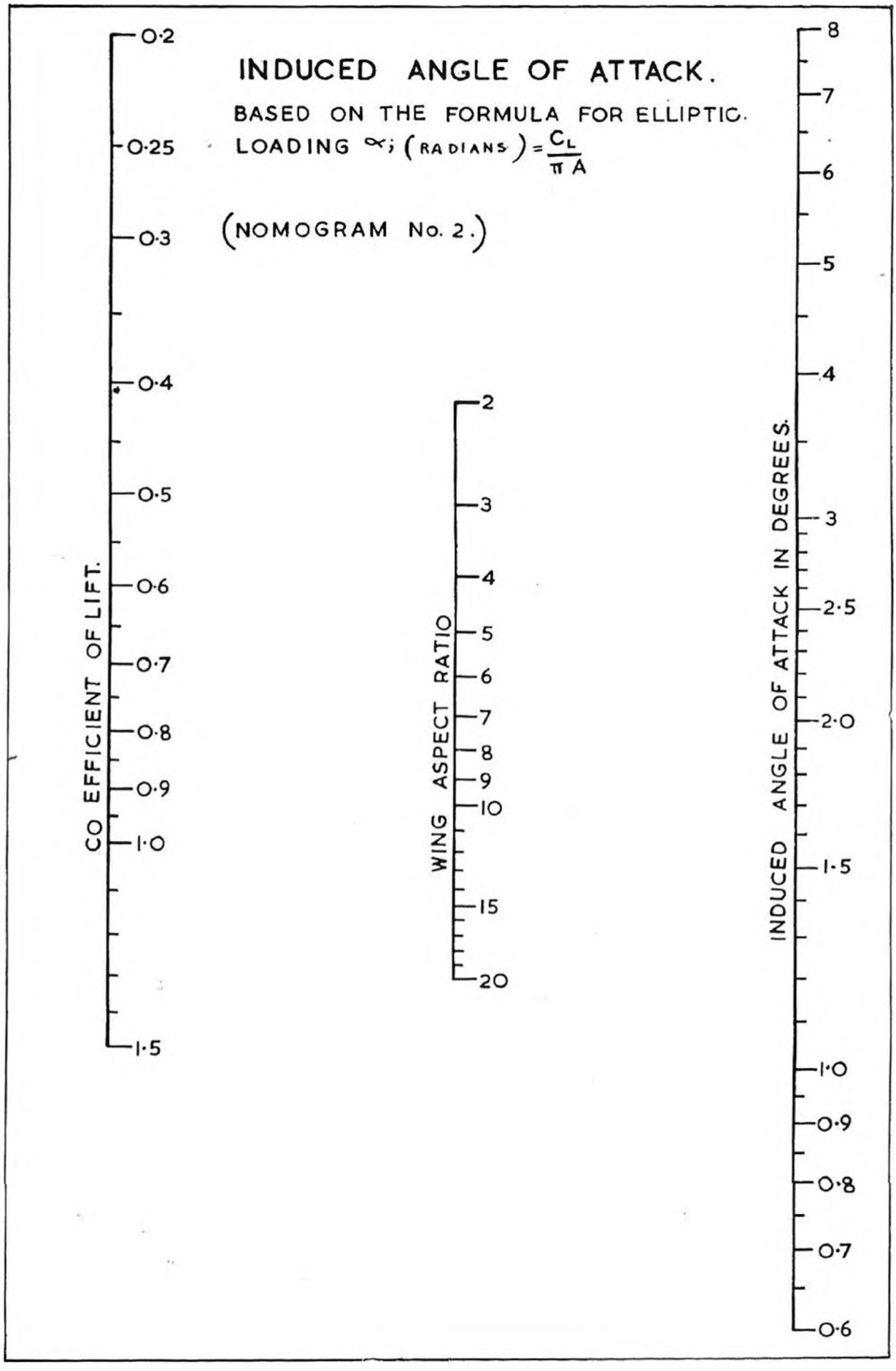
INDUCED ANGLE OF ATTACK.
BASED ON THE FORMULA FOR ELLIPTIC LOADING α_i (RADIANS) $= \frac{C_L}{\pi A}$
(NOMOGRAM No. 2.)
CO EFFICIENT OF LIFT.
0·2
0·25
0·3
0·4
0·5
0·6
0·7
0·8
0·9
1·0
1·5
WING ASPECT RATIO
2
3
4
5
6
7
8
9
10
15
20
INDUCED ANGLE OF ATTACK IN DEGREES.
8
7
6
5
4
3
2·5
2·0
1·5
1·0
0·9
0·8
0·7
0·6

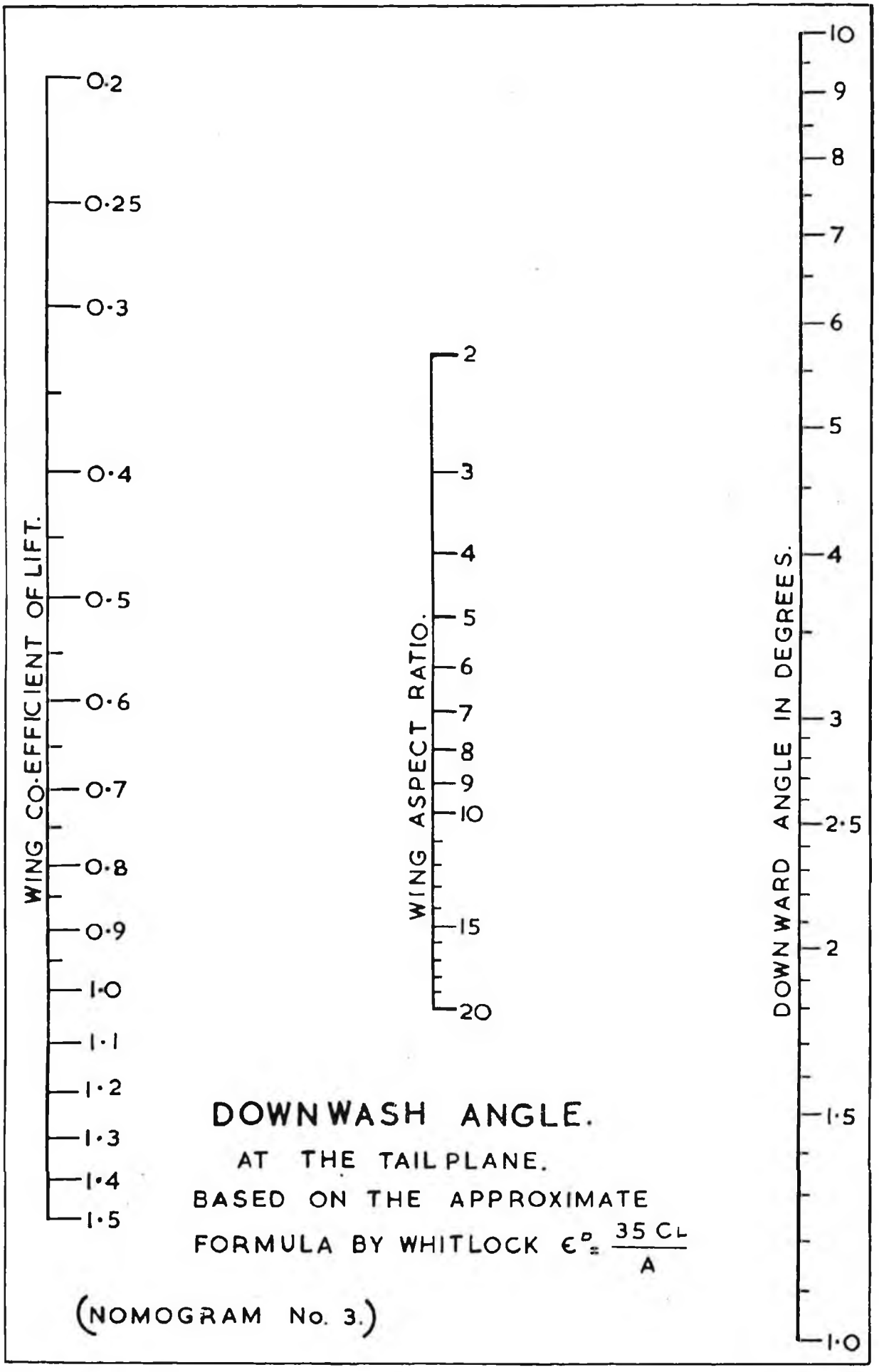
WING CO-EFFICIENT OF LIFT.
0·2
0·25
0·3
0·4
0·5
0·6
0·7
0·8
0·9
1·0
1·1
1·2
1·3
1·4
1·5
WING ASPECT RATIO.
2
3
4
5
6
7
8
9
10
15
20
DOWNWARD ANGLE IN DEGREES.
10
9
8
7
6
5
4
3
2·5
2
1·5
1·0
DOWNWASH ANGLE.
AT THE TAIL PLANE.
BASED ON THE APPROXIMATE
FORMULA BY WHITLOCK $\epsilon^{\circ} = \frac{35\,C_L}{A}$
(NOMOGRAM No. 3.)

(No. 4) TAILPLANE AREA.

This is based on another approximate formula, and although it is accurate enough for normal models, it may have to be considerably modified for unusual designs ; where the tail is very heavy, for instance. But generally it is very reliable, and it is found that most stable designs conform to it.

It is good practice to find the area required from this Nomogram, and then to check the model's stability with No. 9, or the more accurate (and longer) method given in L.S.A.R.A. report No. 29.

(No. 5) TAILPLANE EFFICIENCY.

This gives the efficiency of a tailplane *as a stabiliser* : if the answer is less than about 65%, the area obtained from the preceding Nomogram will have to be increased slightly to compensate.

Provided that the tailplane is clear of the wake of slow moving air left by the wing, the " wake allowance " may be taken as 1.0. In extreme cases, when it is fully immersed in the very concentrated wake behind a laminar flow section, it may be as low as 0.5, but this is most unusual.

This Nomogram is particularly useful if the latest L.S.A.R.A. method of estimating stability is used.

(No. 6) AIRSCREW DIAMETER AND R.P.M.

For certain airscrew types, the important " torque factor " is known with a considerable degree of accuracy. But in view of the very great diversity of designs used by aeromodellers, it is probably best to find the values as needed. This is done by measuring the R.P.M. of a low-pitched example on an engine whose b.h.p. curve is known, and connecting up these values in the Nomogram to find Qs. Then the appropriate figures can be found for any other engine and speed with an airscrew of the same *type* in a matter of seconds.

(No. 7) AIRSCREW PITCH.

Once the engine speed is known, airscrew pitch may be quickly found by estimating the climbing or flying speed. Typical values for latter are :—

General purpose	25 feet/sec.
Competition (slow vertical climb)	25-30 feet/sec.
Competition (fast climb)	50 feet/sec.

For control-line models, speed is more easily measured, and the pitch can be progressively increased until the maximum speed is attained. Then, particularly with stunt models, it is advisable to use a slightly smaller value than that required for maximum speed.

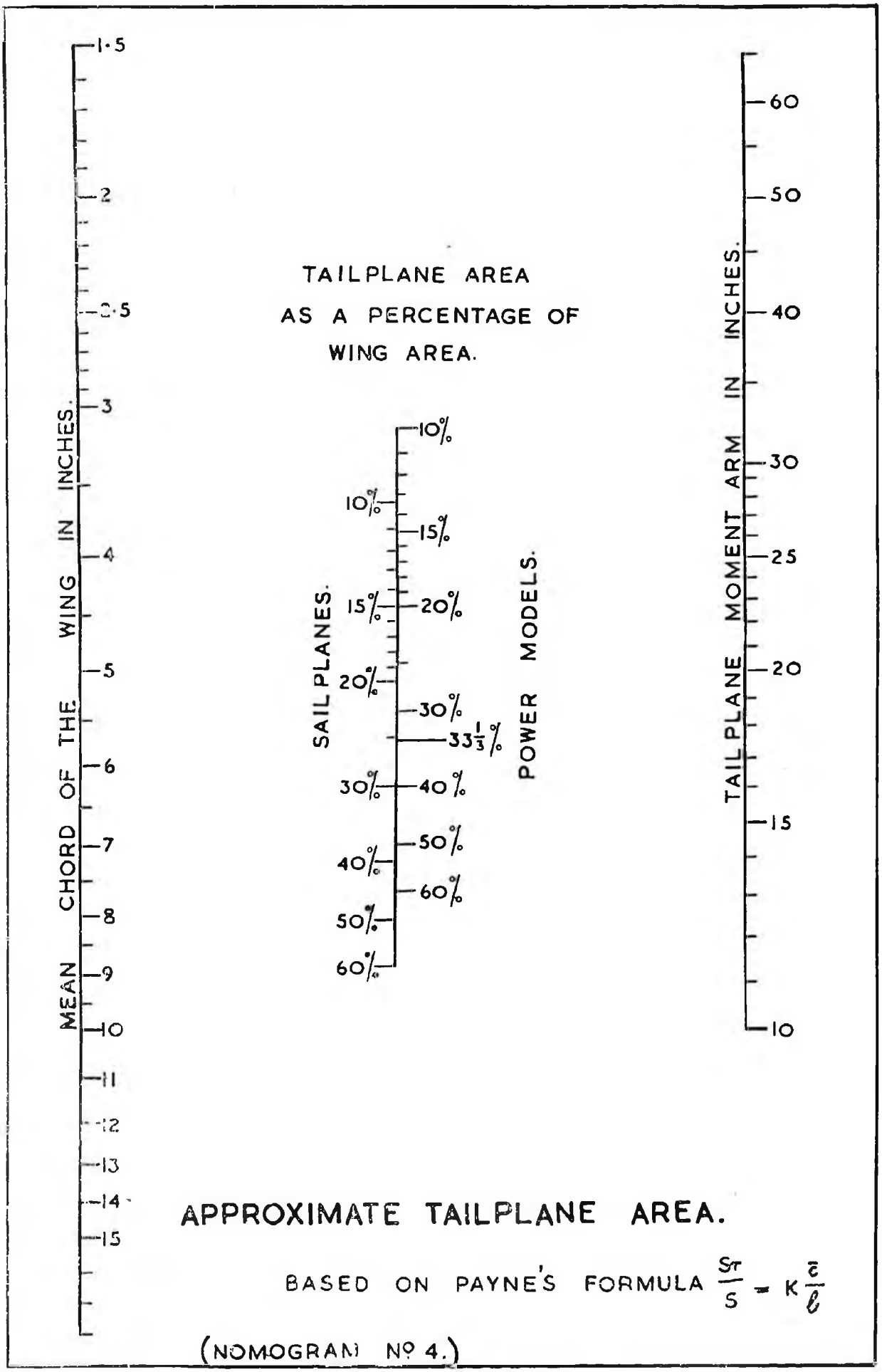
MEAN CHORD OF THE WING IN INCHES.
1·5
2
2·5
3
4
5
6
7
8
9
10
11
12
13
14
15
TAILPLANE AREA
AS A PERCENTAGE OF
WING AREA.
SAIL PLANES.
10%
15%
20%
30%
40%
50%
60%
POWER MODELS.
10%
15%
20%
30%
33⅓%
40%
50%
60%
TAILPLANE MOMENT ARM IN INCHES.
60
50
40
30
25
20
15
10
APPROXIMATE TAILPLANE AREA.
BASED ON PAYNE'S FORMULA $\frac{S_T}{S} = K\frac{\bar{c}}{\ell}$
(NOMOGRAM Nº 4.)

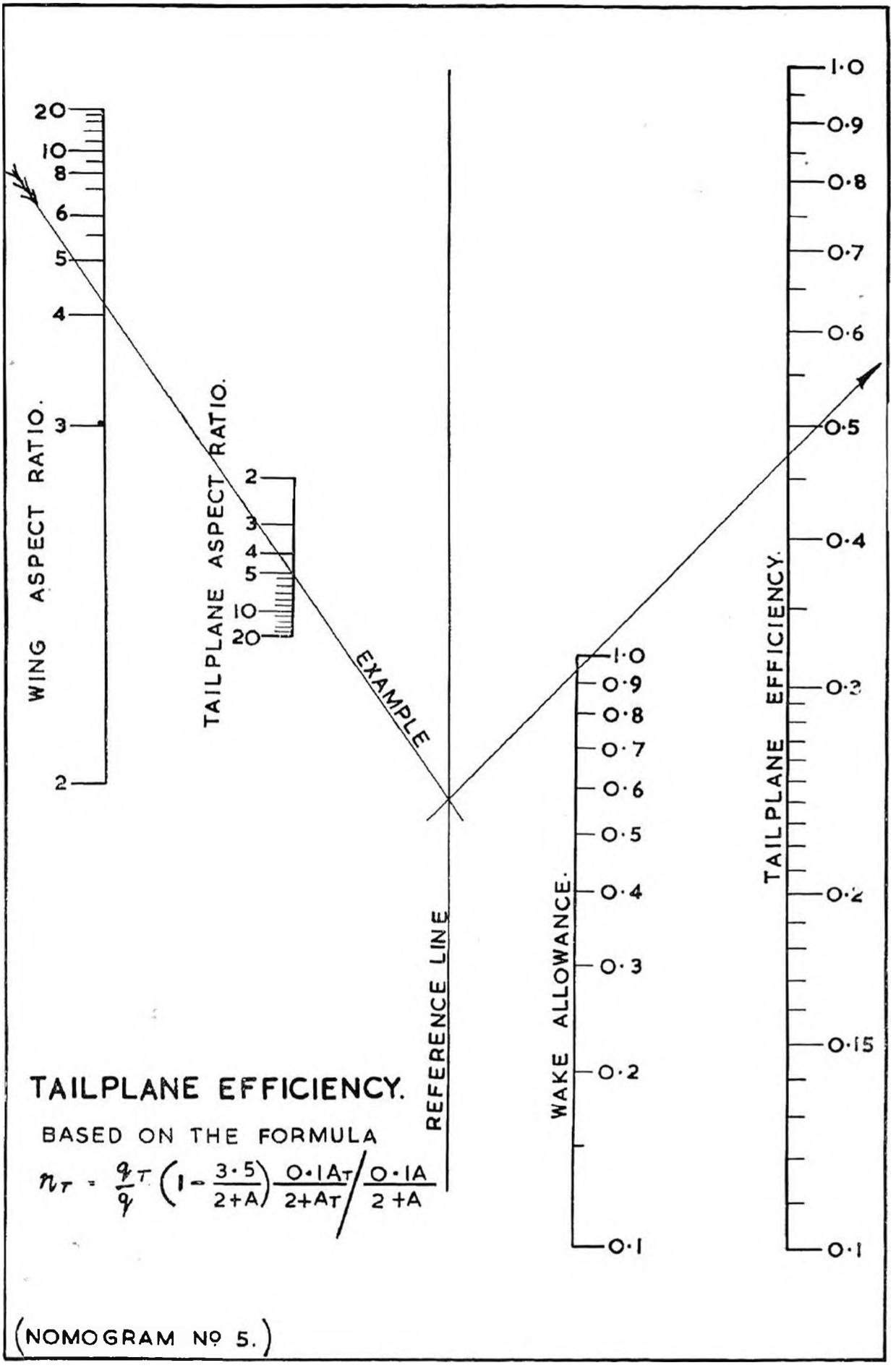

(NOMOGRAM No 5.)

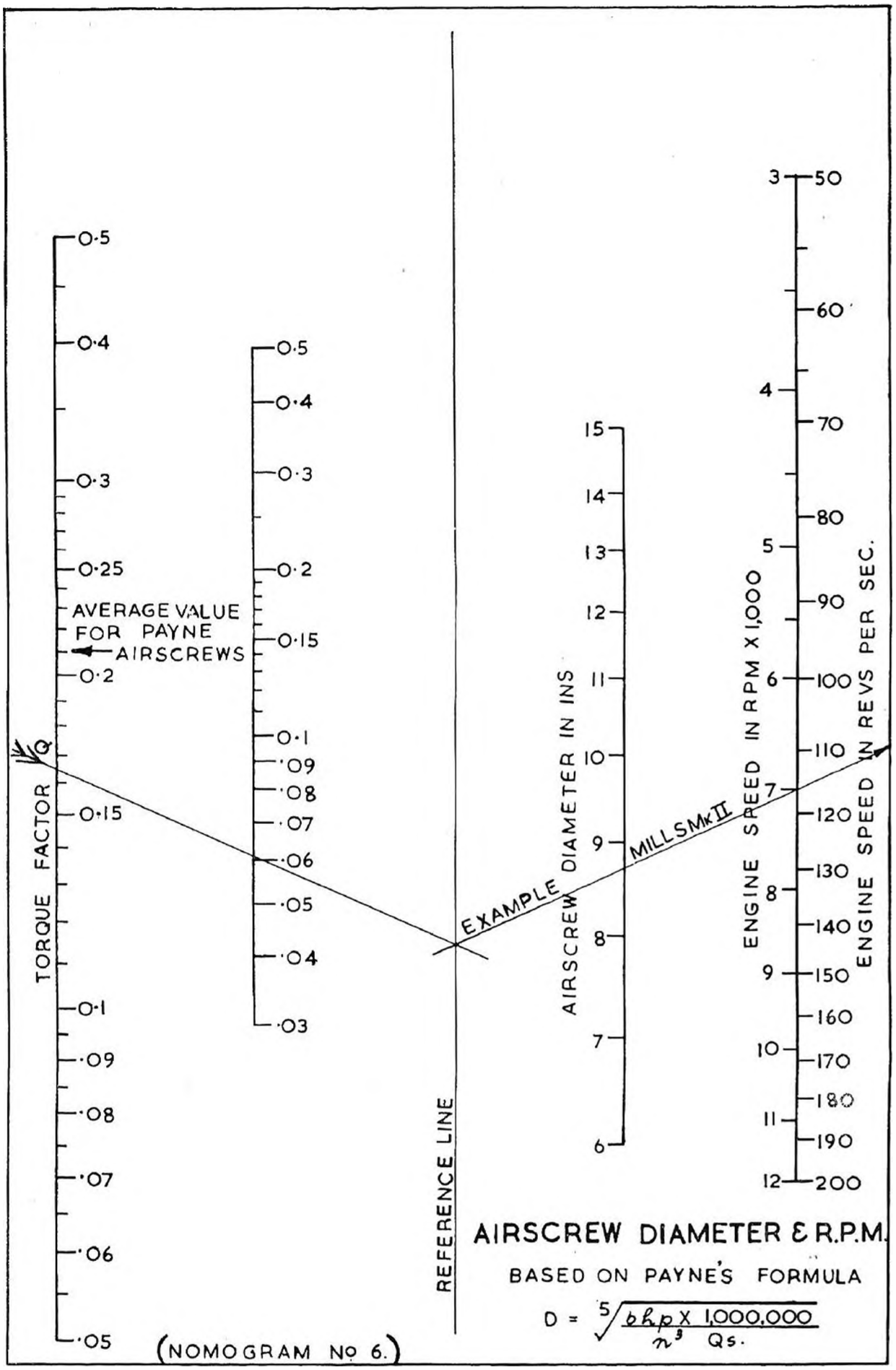
TORQUE FACTOR Q
0·5
0·4
0·3
0·25
AVERAGE VALUE FOR PAYNE AIRSCREWS
0·2
0·15
0·1
·09
·08
·07
·06
·05
0·5
0·4
0·3
0·2
0·15
0·1
·09
·08
·07
·06
·05
·04
·03
REFERENCE LINE
EXAMPLE
MILLS MK II
AIRSCREW DIAMETER IN INS
15
14
13
12
11
10
9
8
7
6
ENGINE SPEED IN RPM X 1,000
3
4
5
6
7
8
9
10
11
12
ENGINE SPEED IN REVS PER SEC.
50
60
70
80
90
100
110
120
130
140
150
160
170
180
190
200
AIRSCREW DIAMETER & R.P.M.
BASED ON PAYNE'S FORMULA
$D = \sqrt[5]{\frac{bhp \times 1{,}000{,}000}{n^3 \; Qs.}}$
(NOMOGRAM No 6.)

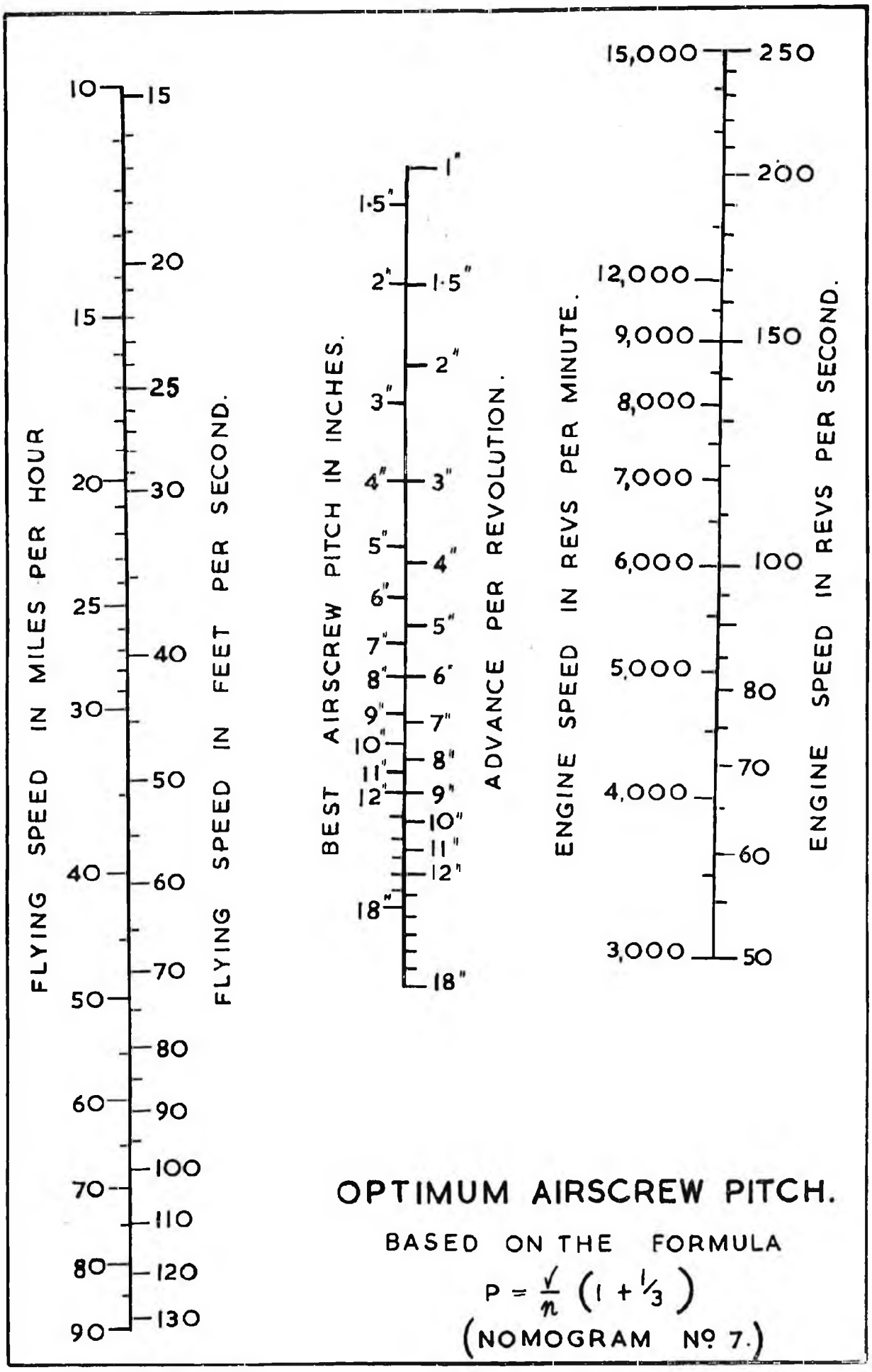
FLYING SPEED IN MILES PER HOUR
10 15 20 25 30 40 50 60 70 80 90
FLYING SPEED IN FEET PER SECOND.
15 20 25 30 40 50 60 70 80 90 100 110 120 130
BEST AIRSCREW PITCH IN INCHES.
1·5" 2" 3" 4" 5" 6" 7" 8" 9" 10" 11" 12" 18"
ADVANCE PER REVOLUTION.
1" 1·5" 2" 3" 4" 5" 6" 7" 8" 9" 10" 11" 12" 18"
ENGINE SPEED IN REVS PER MINUTE.
15,000 12,000 9,000 8,000 7,000 6,000 5,000 4,000 3,000
ENGINE SPEED IN REVS PER SECOND.
250 200 150 100 80 70 60 50
OPTIMUM AIRSCREW PITCH.
BASED ON THE FORMULA
P = √/n (1 + 1/3)
(NOMOGRAM Nº 7.)

(No. 8) IDEAL EFFICIENCY.

Although "ideal efficiency" sounds rather abstract, it is nevertheless a surprisingly useful quantity when making approximations in airscrew theory. Thrust, for instance, can be calculated in the manner described in the Nomogram, and values thus obtained are in excellent agreement with practice. Moreover, since the actual efficiency may be taken as approximately 80% of the ideal value, it may be quickly obtained for problems which require it.

For example, the average speed of the airflow through the airscrew disc is given by V/η, when V = the model's flying speed, and η, the ideal efficiency. This is particularly useful when it is desired to find the most efficient pitch for a given speed.

(No. 9) NEUTRAL POINT POSITION.

The N.P. position is measured in mean wing chords behind the quarter chord (point 25% from the leading edge) and the greater the distance the greater will be the static longitudinal stability of the model. Generally speaking, a value of about 0.7 may be taken as stable, but this must be increased if the model has a heavy tail, or a long and heavy nose. The Jaguar has a value of 0.77 with the Nomogram : using the full and more accurate theory, its tailplane efficiency (No. 5) is 58%, and the N.P. position 0.62 mean chords. Applying a correction for dynamic effects, the true position is about 0.56.

A typical glider familiar to Eaton Bray visitors—" Moby Dick " —has a value of 0.73, and possesses excellent longitudinal stability.

(No. 10) OPTIMUM WEIGHT.

This is connected with the minimum wing chord Nomogram, and applies strictly to models using a section whose critical VL is known, and whose wing is parallel chord and just above the minimum limit. Since it only applies to gliding flight, it cannot be used for power models, as rapid climb demands the lowest possible weight. But for gliders it enables the absolute minimum sinking speed to be obtained for a given wing area and section.

(No. 11) OPTIMUM CLIMBING ANGLE.

Provided that the airscrew thrust is at least 40% of a model's weight, and does not exceed it by more than 20%, this formula applies accurately. It is, of course, quite possible to obtain a form of " vertical" climb with the higher part of this range, but it has been proved that the actual altitude reached in a given time is much less. Better by far to increase downthrust until the optimum angle is reached.

In the absence of more accurate information, thrust may be taken as equal to the static thrust, but the use of Nomogram No. 8 is more to be recommended.

When the thrust exceeds the weight by at least 30%, the vertical or tight spiral climb is most efficient, and should always be used. It should be remembered that in all types of climb, the forward speed may differ considerably from the gliding speed, being usually much greater. It is quite possible for a competition model to climb at four times its gliding speed, and thus a correspondingly large airscrew pitch will be needed for maximum efficiency.

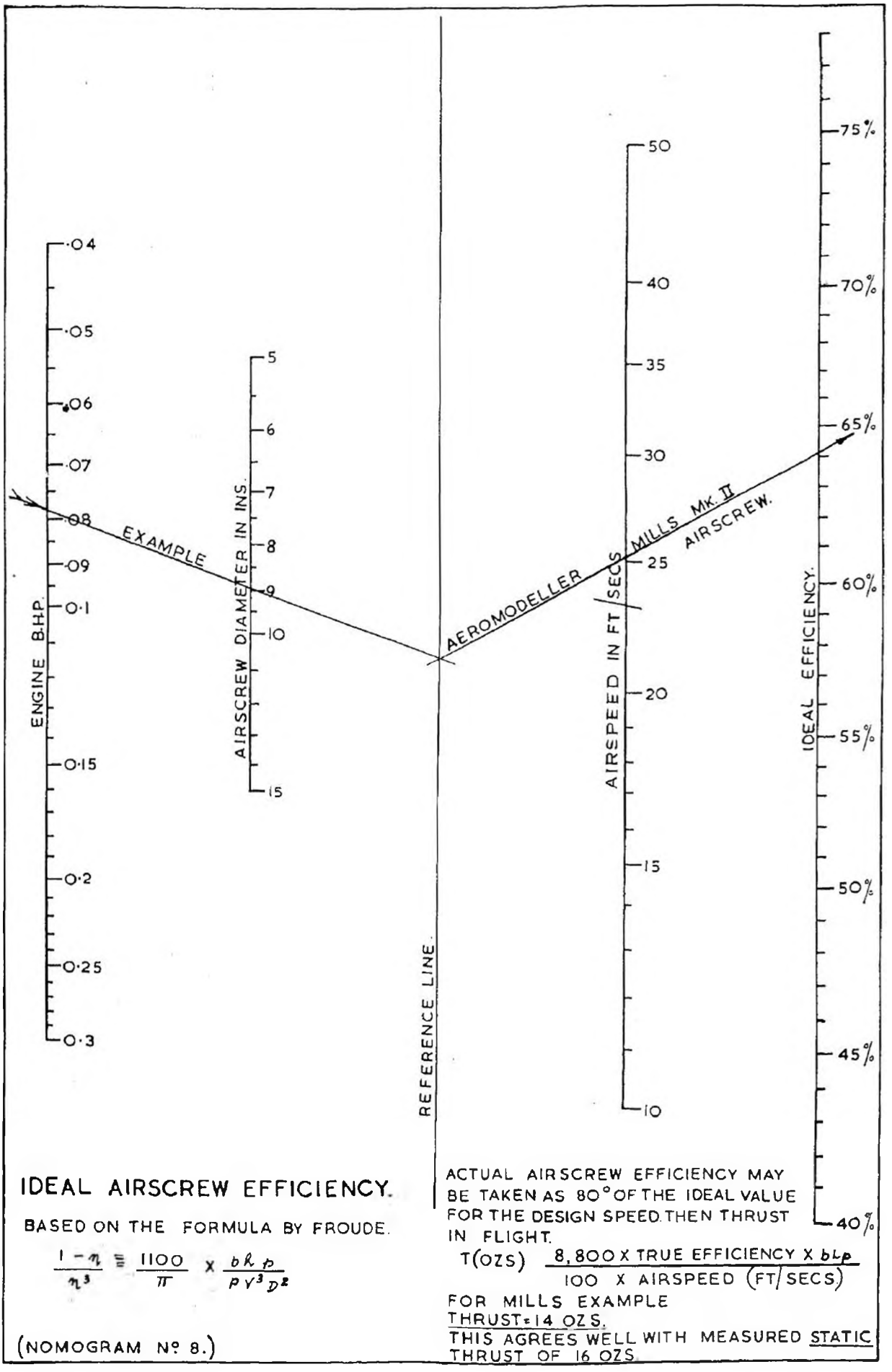

IDEAL AIRSCREW EFFICIENCY.

BASED ON THE FORMULA BY FROUDE.

$$\frac{1-\eta}{\eta^3} = \frac{1100}{\pi} \times \frac{bhp}{\rho V^3 D^2}$$

(NOMOGRAM Nº 8.)

ACTUAL AIRSCREW EFFICIENCY MAY BE TAKEN AS 80° OF THE IDEAL VALUE FOR THE DESIGN SPEED. THEN THRUST IN FLIGHT.

$$T(\text{OZS}) \quad \frac{8{,}800 \times \text{TRUE EFFICIENCY} \times bhp}{100 \times \text{AIRSPEED (FT/SECS)}}$$

FOR MILLS EXAMPLE
THRUST = 14 OZS.
THIS AGREES WELL WITH MEASURED STATIC THRUST OF 16 OZS.

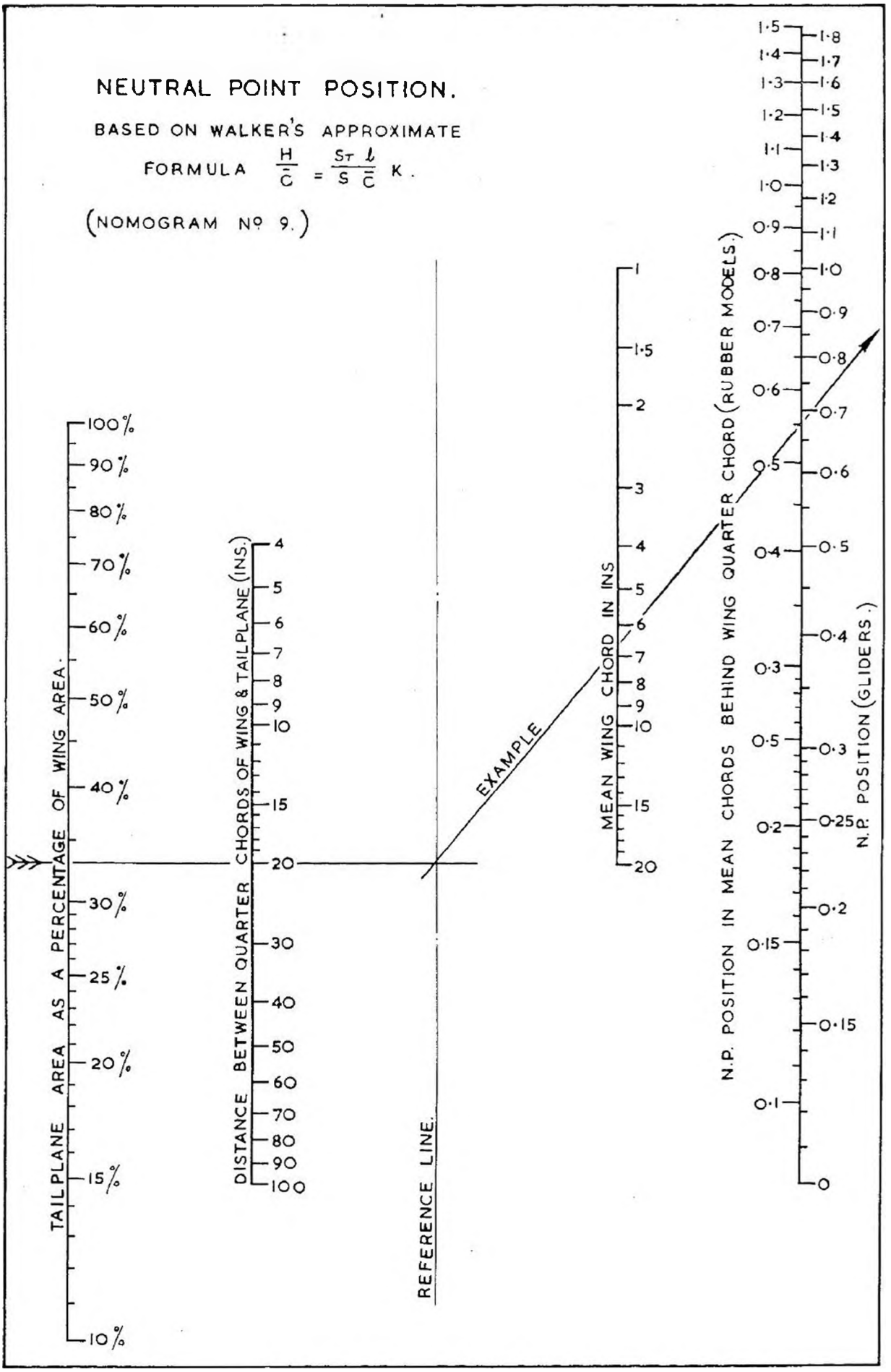
NEUTRAL POINT POSITION.
BASED ON WALKER'S APPROXIMATE
FORMULA $\frac{H}{\bar{C}} = \frac{S_T}{S}\frac{l}{\bar{C}}K$.
(NOMOGRAM Nº 9.)
TAILPLANE AREA AS A PERCENTAGE OF WING AREA.
100% 90% 80% 70% 60% 50% 40% 30% 25% 20% 15% 10%
DISTANCE BETWEEN QUARTER CHORDS OF WING & TAILPLANE (INS.)
4 5 6 7 8 9 10 15 20 30 40 50 60 70 80 90 100
REFERENCE LINE.
EXAMPLE
MEAN WING CHORD IN INS
1 1.5 2 3 4 5 6 7 8 9 10 15 20
N.P. POSITION IN MEAN CHORDS BEHIND WING QUARTER CHORD (RUBBER MODELS.)
1.5 1.4 1.3 1.2 1.1 1.0 0.9 0.8 0.7 0.6 0.5 0.4 0.3 0.5 0.2 0.15 0.1
N.P. POSITION (GLIDERS.)
1.8 1.7 1.6 1.5 1.4 1.3 1.2 1.1 1.0 0.9 0.8 0.7 0.6 0.5 0.4 0.3 0.25 0.2 0.15 0

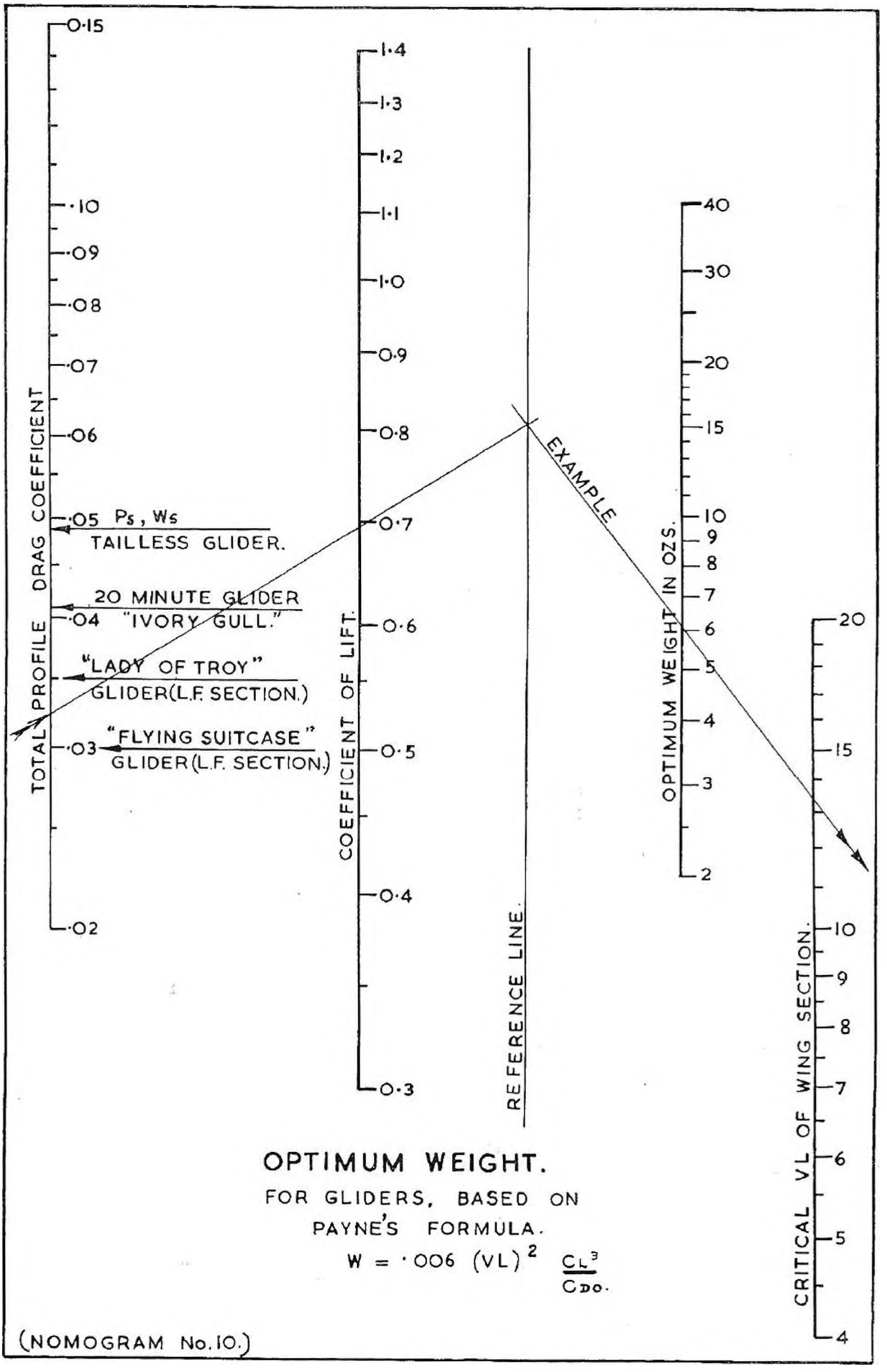

OPTIMUM WEIGHT.

FOR GLIDERS, BASED ON PAYNE'S FORMULA.

$$W = \cdot 006\ (VL)^2\ \frac{C_L^3}{C_{DO}}.$$

(NOMOGRAM No. 10.)

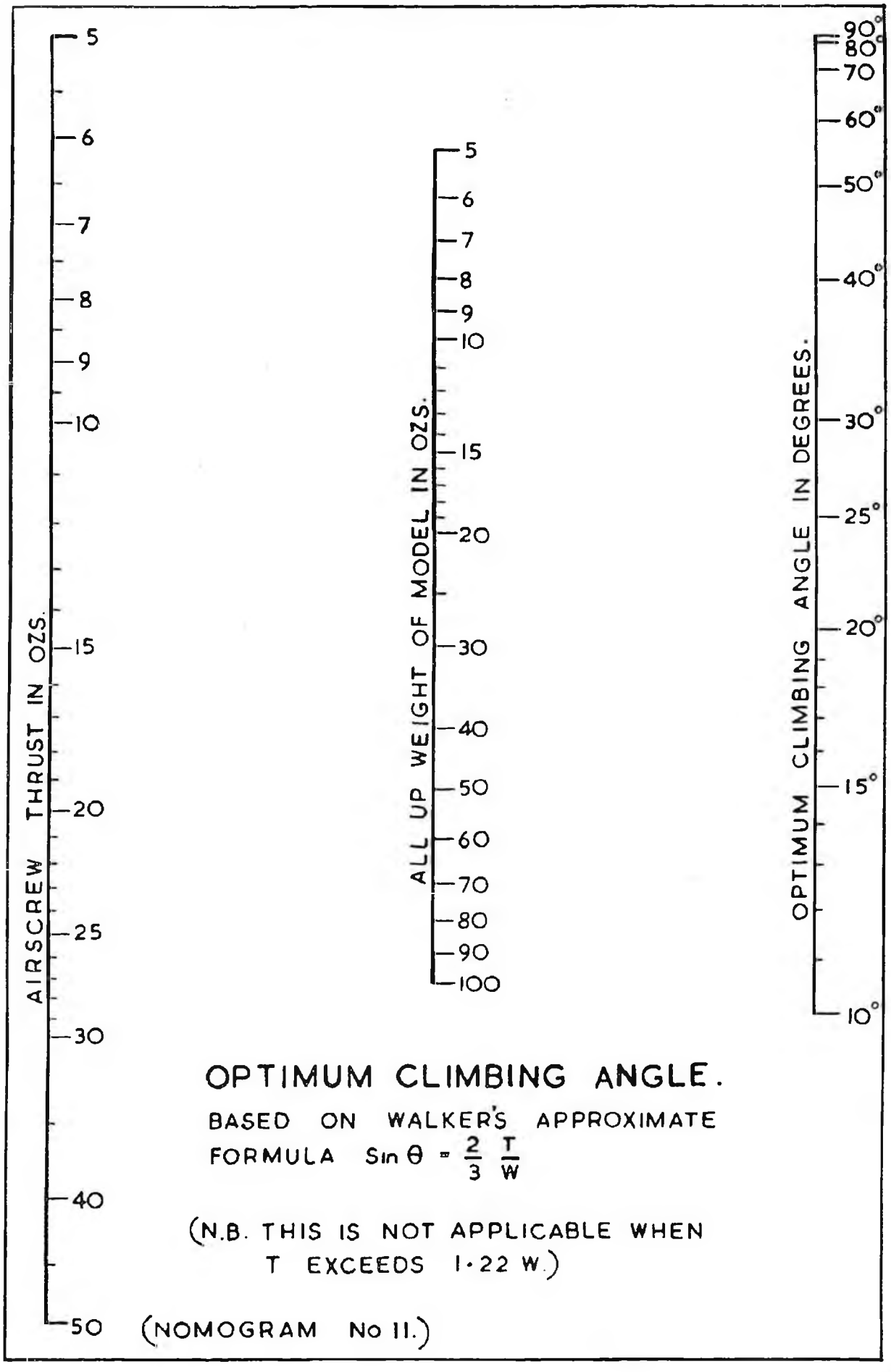
AIRSCREW THRUST IN OZS.
5
6
7
8
9
10
15
20
25
30
40
50
ALL UP WEIGHT OF MODEL IN OZS.
5
6
7
8
9
10
15
20
30
40
50
60
70
80
90
100
OPTIMUM CLIMBING ANGLE IN DEGREES.
90°
80°
70
60°
50°
40°
30°
25°
20°
15°
10°
OPTIMUM CLIMBING ANGLE.
BASED ON WALKER'S APPROXIMATE
FORMULA Sin θ = 2/3 T/W
(N.B. THIS IS NOT APPLICABLE WHEN
T EXCEEDS 1·22 W.)
(NOMOGRAM No 11.)

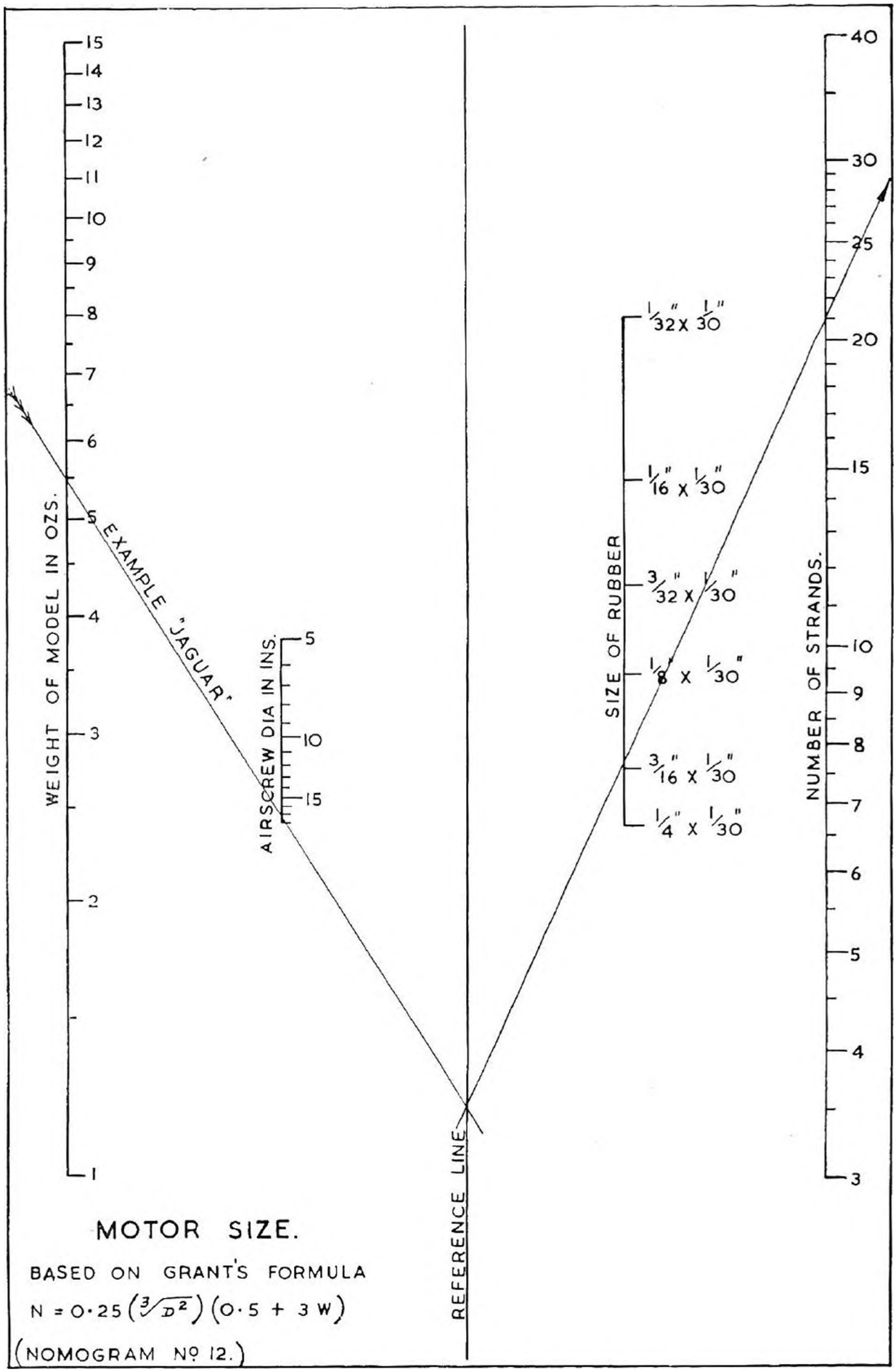
WEIGHT OF MODEL IN OZS.
15
14
13
12
11
10
9
8
7
6
5
4
3
2
1
EXAMPLE 'JAGUAR'
AIRSCREW DIA IN INS.
5
10
15
REFERENCE LINE
SIZE OF RUBBER
1/32" X 1/30"
1/16" X 1/30"
3/32" X 1/30"
1/8" X 1/30"
3/16" X 1/30"
1/4" X 1/30"
NUMBER OF STRANDS.
40
30
25
20
15
10
9
8
7
6
5
4
3
MOTOR SIZE.
BASED ON GRANT'S FORMULA
N = 0·25 (∛D²) (0·5 + 3 W)
(NOMOGRAM Nº 12.)

(No. 12) RUBBER MOTOR SIZE.

This empirical formula has been in use for a number of years, and is part of what is generally taken to be Grant's most valuable work on aeromodelling.

A more comprehensive formula is given in his book, *Model Airplane Design* but this simplified version has been found quite adequate for all practical purposes.

It will be noted that the simpler working formulae such as Wing Loading, Lift, Wing Area, Drag and so on have not been covered in this series of nomograms. For the benefit of those who would like to do all their design calculations without the need for mathematics, we would remind them that R. H. Warring's *Nomographs for the Aeromodeller* (Harborough 2/-) gives nomograms for the following useful calculations :—

Wing Loading	Velocity and Stalling Speed
Lift	Wing Drag
Parasitic Drag	Induced Effects
H.P. Required	L/D Ratio and Gliding Angle
H.P. available	Rate of Climb
Reynolds Number	Airscrew Design Factor J.

HELPING THE TIMEKEEPER TO KEEP YOUR MODEL IN SIGHT LONGER.

The following notes on colour visibility from Frank Zaic's *Model Glider Design* may squeeze a few more seconds out of the timekeeper.

The Physical Society of London publish a table as under, giving the effective visibility range of traffic lights :—

Colour	*Range in Miles*	*Colour*	*Range in Miles*
Red	3 to 3½	Yellow... ...	1 to 1½
Green ...	2½ to 3	Blue	½ to ¾
White... ...	2 to 2½	Violet ...	½ to ¾

Orange yellow to vermilion orange colours have been commonly accepted after many tests in actual aircraft operation as the most visible colours contrasting with land, sky, verdure and water. These colours are also durable and resistant to fading.

Another interesting table by Le Courrier from *The Scientific American* gives legibility of various colour combinations, and though primarily intended for advertising purposes may be useful for model aircraft trimming :—

Legibility Order	*Decoration*	*Background*	*Legibility Order*	*Decoration*	*Background*
1	Black	Yellow	7	Yellow	Black
2	Green	White	8	White	Red
3	Red	White	9	White	Green
4	Blue	White	10	White	Black
5	White	Blue	11	Red	Yellow
6	Black	White	12	Green	Red

USEFUL MODEL FORMULAE

The bracketed numbers in front of formulae denote the relevant Nomograms.

WING.

$$\text{Lift (lbs.)} = C_L \frac{\rho}{2} V^2 S$$

$$\text{Drag (lbs.)} = C_D \frac{\rho}{2} V^2 S$$

$$\text{Moment (lbs. ft.)} = C_m \frac{\rho}{2} V^2 Sc$$

(2) $$\text{Induced angle of attack } (\alpha_i) = \frac{18.2\, C_L}{A}$$

$$\text{Induced drag coefficient } (C_{Di}) = \frac{0.318\, C_L^2}{A}$$

(3) $$\text{Downwash angle } (\epsilon^\circ) = \frac{35 C_L}{A} \quad \text{(Whitlock)}$$

$$\text{Aspect Ratio (A)} = \frac{(\text{span})^2}{\text{area}}$$

$$\text{Optimum Aspect ratio} = \frac{W\ (\text{ozs})}{.019\, C_L\, (VL)^2} \quad \text{(Payne)}$$

VL number = chord (feet) × velocity (feet/sec.)

TAILPLANE.

(4) $$\text{Area (fraction of wing area)} = \frac{\text{mean wing chord}}{\text{moment arm}} \quad \text{(Payne)}$$

(Reduce this by 25% for gliders)

(5) $$\text{Efficiency } (\eta_T) = \frac{q_T}{q}\left(1 - \frac{d\epsilon}{d\alpha}\right) \frac{dC_{LT}}{d\alpha_T} \Big/ \frac{dC_L}{d\alpha}$$

AIRSCREW.

(6) $$\text{Diameter (feet)} = 5 \sqrt{\frac{\text{b.h.p.}}{n^3 Qs} \times 1{,}000{,}000} \quad \text{(Payne)}$$

$$\text{Inflow (ft./sec.)} = \frac{V}{2}\left[\left(1 + \frac{dT}{dr} \frac{1606}{v^2 r}\right) - 1 \right]^{\frac{1}{2}} \quad \text{(Payne)}$$

$$\tan \phi = \frac{1.9\, V_E}{n.r}$$

V_E = V + inflow velocity

$$\text{Thrust (lbs.)} = \frac{550\eta\ \text{b.h.p.}}{V}$$

(η = 80% ideal efficiency. *See* Nomogram No. 8)

STABILITY.

Neutral Point position.

$$\frac{H}{\bar{c}} = \frac{\frac{S_T}{S}\,\frac{l}{\bar{c}}\,\eta_T}{1+\frac{S_T}{S}\,\eta_T} \qquad \text{(Walker)}$$

$$\text{Minimum Static margin} = .025\frac{C_L{}^2\,K}{C_D\,\bar{c}} \qquad \text{(Walker)}$$

GENERAL.

(10) Optimum Weight (gliders) $= .006\ (VL)^2\ \frac{C_L{}^3}{C_{DO}}$ (Payne)

(11) Optimum climbing angle, $\sin\theta = \frac{2}{3}\ \frac{T}{W}$ (Walker)

(This only holds up to $\frac{T}{W} = 1.22$)

$$\text{Gliding speed} = \sqrt{\frac{7500\ W\ (\text{ozs.})}{C_L.S\ (\text{sq. ins.})}}$$

SYMBOLS.

C_L	=	coefficient of lift
C_D	=	coefficient of drag
C_m	=	moment coefficient
V	=	airspeed
S	=	wing area
ρ	=	mass density of air
	=	.00238 slugs/feet.^{3}
A	=	Aspect ratio
VL	=	critical VL number
W	=	weight (all-up)
qT/q	=	wake allowance at tailplane
b.h.p.	=	engine brake horse power
n	=	engine revs./second
Qs	=	Static torque factor (Payne)
	=	0.15 for small engines (1 c.c.)
		0.3 for large ones (5 c.c.)
r	=	radius of airscrew element (ins.)
dT/dr	=	thrust loading on blade
η	=	airscrew efficiency
$\bar{c}$	=	mean chord
l	=	moment arm (tailplane)
η_T	=	tailplane efficiency
S_T	=	tailplane area
K	=	radius of gyration of model

All dimensional quantities are in feet/lbs. and ft./sec. unless specifically mentioned.

AEROFOIL SECTIONS

A selection from the more interesting new sections, together with one or two ever useful " old favourites."

L.D.C. 2

Station	0	2.5	5.0	10	20	30	40	50	60	70	80	90	100
Upper ...	0	2.2	3.0	4.75	6.35	7.65	8.75	9.45	9.45	8.5	6.4	3.5	0
Lower ...	0	-2.0	-2.45	-2.65	-2.6	-1.9	-1.2	-0.45	0.2	0.85	1.1	0.9	0

An L.S.A.R.A. laminar flow section. Excellent for small and medium sized models, although not suitable for slabsiders. Nose radius=2%.

L.D.C. 3

Station	0	2.5	5.0	10	20	30	40	50	60	70	80	90	100
Upper ...	0	2.7	3.55	4.9	6.95	8.65	10.0	11.05	11.45	10.85	9.05	5.4	0
Lower ...	0	-1.7	-1.8	-1.35	-0.8	0	0.85	1.8	2.75	3.4	3.5	2.5	0

With a higher camber than L.D.C. 2, this section is more suitable for slow flying models. Nose radius=2%.

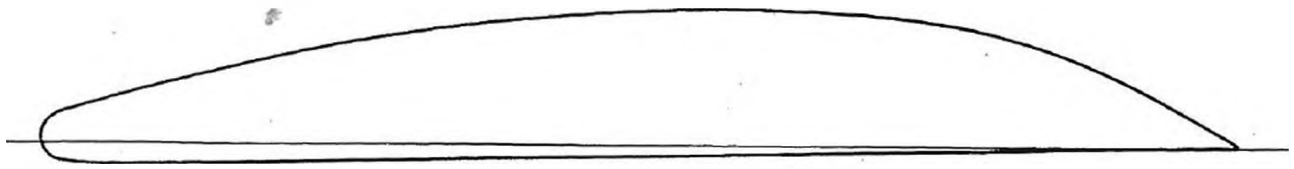

L.D.C. 3M

Station ...	0	2.5	5.0	10	20	30	40	50	60	70	80	90	100
Upper ...	0	2.7	3.55	4.9	6.95	8.65	10.0	11.05	11.45	10.85	9.05	5.4	0
Lower ...	0	-1.7	-1.9	-1.8	-1.6	-1.4	-1.2	-1.0	-0.8	-0.6	-0.4	-0.2	0

Some of the aerodynamic efficiency of the previous section is sacrificed to obtain the structural advantages of a flat under-surface. Nose radius=2%.

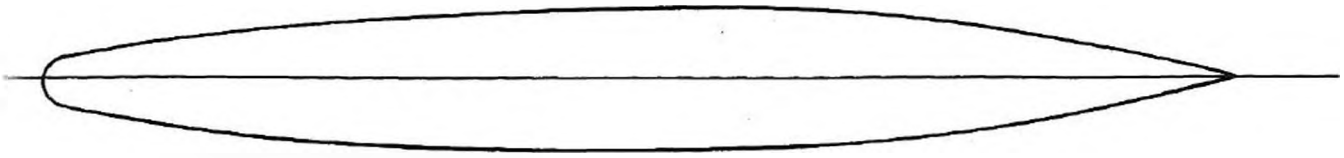

L.S.A.R.A. "Pod" Section

Station ...	0	5	10	20	30	40	50	60	70	80	90	100
Upper ...	0	2.6	3.45	4.6	5.3	5.75	5.9	5.85	5.35	4.3	2.4	0
Lower ...	0	-2.6	-3.45	-4.6	-5.3	-5.75	-5.9	-5.85	-5.35	-4.3	-2.4	0

This symmetrical laminar flow airfoil may be used for the longitudinal section of "pods," "suitcases," and pylons, where it has the advantage of low drag. In these cases, however, it is usually best to use twin fins on the tailplane to avoid blanketing by the wake. Nose radius=2%.

Curved Plate 417a

Station ...	0	2.5	5.0	10	20	30	40	50	60	70	80	90	100
Upper ...	1.45	3.65	4.7	6.3	7.75	8.6	8.8	8.45	7.89	6.9	5.7	4.25	1.45
Lower ...	1.45	0.45	1.55	3.3	4.85	5.7	5.9	5.55	4.95	4.0	2.8	1.3	1.45

The father of all "Turbulent flow" sections, the performance of this design cannot well be bettered for small models. Nose radius is 1.45%. Critical VL is under 6.4.

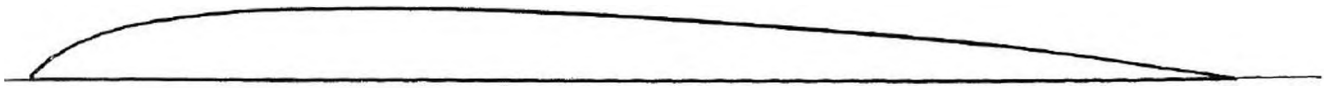

Sigurd Isacson 33006

Station ...	0	2.5	5.0	10	20	30	40	50	60	70	80	90	100
Upper ...	0	2.3	3.5	4.9	5.8	6.0	5.7	5.3	4.7	3.8	2.9	1.6	0
Lower ...	0	0	0	0	0	0	0	0	0	0	0	0	0

This is excellent for the tailplanes of medium size models, where a 3% thick flat plate would not provide enough spar depth. Nose radius=0, *i.e.*, it is virtually pointed. Critical VL=5.0.

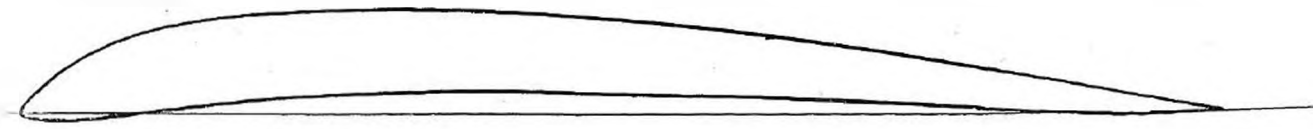

Sigurd Isacson 53507

Station ...	0	2.5	5.0	10	20	30	40	50	60	70	80	90	100
Upper ...	0	3.0	4.6	6.7	8.3	8.7	8.4	7.6	6.6	5.3	3.7	2.0	0.3
Lower ...	0	-0.5	-0.4	0	1.2	1.6	1.8	1.8	1.5	1.2	0.6	0.1	0

An excellent section for small lightly-loaded models. As with many S.I. designs, the trailing edge angle is rather small, and considerable care is needed if the finished wing is to be both strong and reasonably accurate. Nose radius=0.5%. Critical VL=10.0.

SIGURD ISACSON 73503

Station ...	0	2.5	5	10	20	30	40	50	60	70	80	90	100
Upper ...	0	3.0	5.0	7.6	9.9	10.3	10.0	9.2	8.0	6.5	4.6	2.7	0.4
Lower ...	0	-0.4	-0.4	0.4	2.0	3.0	3.5	3.4	3.0	2.3	1.4	0.4	0

This also shows up to the best advantage on lightly loaded models. Notice that all these "Turbulent flow" designs have very small nose radii for low "critical VL." Here it is 0.4 for critical VL=7.0.

SIGURD ISACSON 64009

Station ...	0	2.5	5.0	10	20	30	40	50	60	70	80	90	100
Upper ...	0	2.6	4.6	7.0	9.6	10.5	10.5	9.7	8.3	6.7	4.8	2.7	0.2
Lower ...	0	-0.5	-0.6	-0.3	0.6	1.3	1.8	2.0	2.0	1.8	1.3	0.6	0

Designed for larger models than those given previously, this section allows adequate spar depth. Nose radius is only 0.3%, but the critical VL fairly high, being somewhere between 9 and 19.

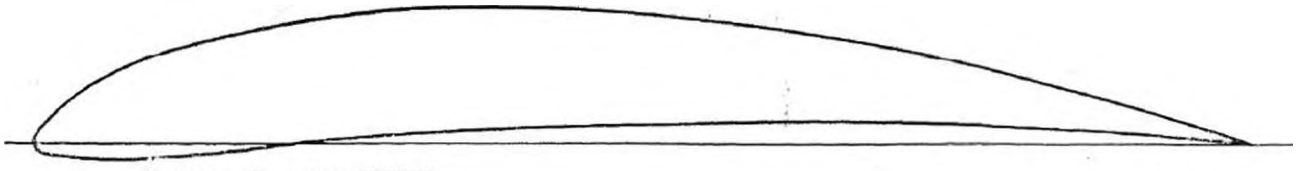

SIGURD ISACSON 53009

Station ...	0	2.5	5.0	10	20	30	40	50	60	70	80	90	100
Upper ...	0	3.4	5.1	7.3	9.0	9.6	9.2	8.5	7.2	5.8	4.1	2.2	0.2
Lower ...	0	-0.6	-0.8	-0.6	0.1	0.6	0.7	0.7	0.7	0.6	0.2	0.1	0

This has less camber than the one above and is suitable for models of medium size and loading. The critical VL is between 10 and 12, and the nose radius 0.8%.

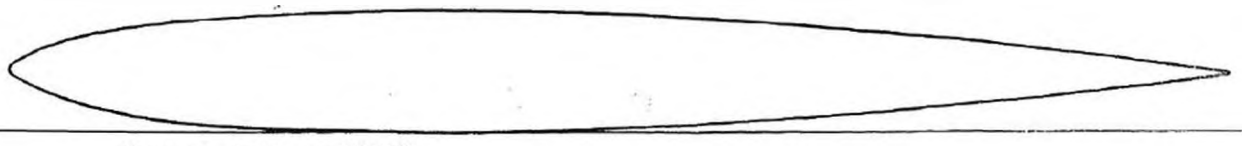

SIGURD ISACSON 03010

Station ...	0	2.5	5.0	10	20	30	40	50	60	70	80	90	100
Upper ...	0	1.5	2.5	3.6	4.8	5.0	4.9	4.5	4.0	3.5	2.8	1.5	0
Lower ...	0	-1.5	-2.5	-3.6	-4.8	-5.0	-4.9	-4.5	-4.0	-3.5	-2.8	-1.5	0

With a thickness of 10% and a critical VL of approximately 10–12 this section is ideal for tailplanes on large models : when the chord is at least six inches say. If the ordinates are reduced by 40% it serves equally well in a tailplane for any class of model, and its critical VL is reduced to about 7. In its original form, it may also be used for wings of stunt control-liners, whilst the thinned down version is excellent for speed. Nose radius is 0.5%.

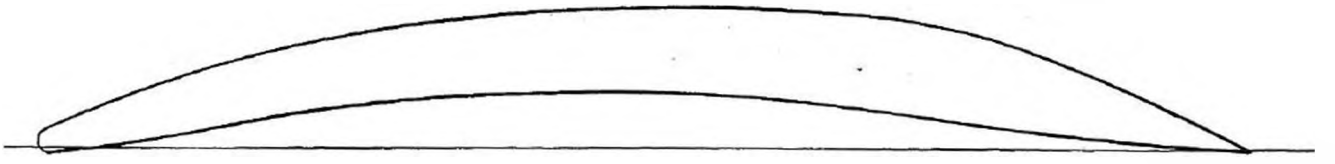

PAYNE 8C16

Station ...	0	2.0	5	10	20	30	40	50	60	70	80	90	100
Upper ...	0	2.0	3.4	5.3	8.2	10.1	11.2	11.7	11.7	11.0	8.8	5.0	0
Lower ...	0	-0.7	0	0.9	2.6	3.9	4.5	4.4	3.9	3.0	1.9	0.7	0

This has been designed for wooden airscrew blades, and provided it is accurately carved its performance is superior to that of orthodox types. Its efficient angular range is rather small and thus care should be taken with the blade angles. Critical VL=13 and nose radius =1%.

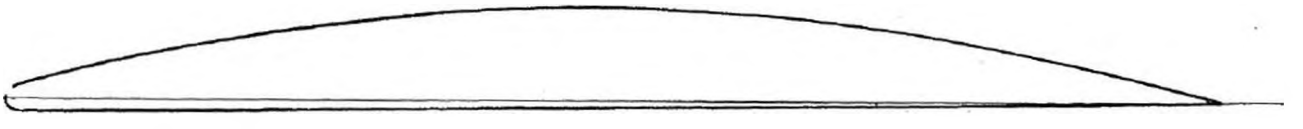

PAYNE 8C23

Station ...	0	1.0	5.0	10	20	30	40	50	60	70	80	90	100
Upper ...	0	1.1	2.2	3.4	5.3	6.7	7.4	7.8	7.3	6.4	4.8	2.7	0
Lower ...	0	-1.0	-1.0	-0.9	-0.8	-0.7	-0.6	-0.5	-0.4	-0.3	-0.2	-0.1	0

Although designed for airscrew blades where a rigid material such as " Hydulignum " is used, this section has proved excellent for " lifting " tailplanes. Critical VL=9 and nose radius=1%.

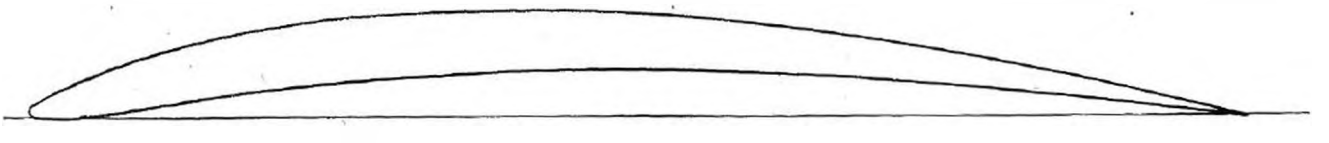

DAVIS (A=0.9 ; B=0.1)

Station ...	0	2.5	5.0	10	20	30	40	50	60	70	80	90	100
Upper ...	0	2.2	3.3	5.1	7.5	8.5	8.9	8.6	7.8	6.4	4.6	2.5	0
Lower ...	0	-0.1	0.1	0.9	2.3	3.2	3.7	4.0	3.8	3.3	2.5	1.4	0

An excellent section for ultra lightweight and indoor models : for microfilm models the upper surface ordinates should of course be used.

DAVIS (A=1.0; B=0.2)

Station ...	0	2.5	5.0	10	20	30	40	50	60	70	80	90	100
Upper ...	0	3.4	5.0	7.2	9.8	11.1	11.5	11.0	9.9	8.2	6.1	3.4	0
Lower ...	0	-1.0	-1.2	-0.9	-0.2	0.6	1.2	1.7	1.9	1.9	1.6	1.0	0

A reliable section for the average model.

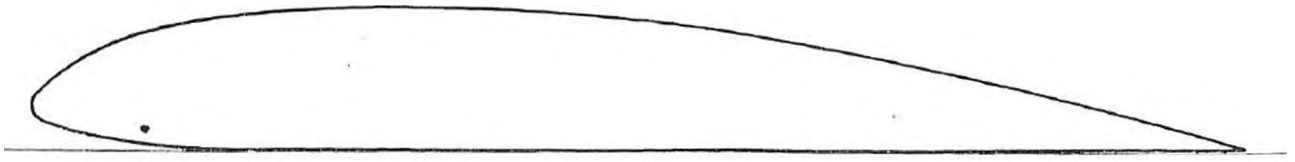

CLARK Y

Station ...	0	2.5	5.0	10	20	30	40	50	60	70	80	90	100
Upper ...	3.45	6.5	7.9	9.6	11.4	11.7	11.4	10.5	9.2	7.4	5.2	2.8	0
Lower ...	3.45	1.65	0.9	0.4	0.03	0	0	0	0	0	0	0	0

An " old faithful " of the aeromodelling movement which can always be relied upon for general purposes. Its chief virtue lies in the absence of any vices.

N.A.C.A. 6409

Station ...	0	2.5	5.0	10	20	30	40	50	60	70	80	90	100
Upper ...	0	2.96	4.3	6.31	8.88	10.13	10.35	9.81	8.78	7.28	5.34	2.95	0
Lower ...	0	-1.11	-1.18	-0.88	*0.17	1.12	1.65	1.86	1.92	1.76	1.36	0.74	0

This has been found particularly successful with medium-sized power duration models. N.A.C.A. 6412, 4409, and 6512 are related sections which have proved their worth, and ordinates may be found in *Airfoil Sections*, by R. H. Warring.

N.60

Station ...	0	2.5	5.0	10	20	30	40	50	60	70	80	90	100
Upper ...	3.4	6.76	8.24	10.14	11.98	12.41	12.03	11.06	9.55	7.66	5.5	3.04	0
Lower ...	3.4	1.46	0.96	0.4	0.04	0.04	0.22	0.48	0.71	0.78	6.4	0.37	0

An excellent general purpose section for use when chords of the order of 8 ins. are permissible. Critical VL=13.3 and nose radius =1.4%.

GRANT X—9

Station ...	0	2.5	5.0	10	20	30	40	50	60	70	80	90	100
Upper ...	0	3.37	4.78	6.97	8.84	9.47	9.3	8.57	7.44	5.97	4.24	2.2	0.05
Lower ...	0	-1.5	-2.1	-2.48	-1.73	-0.8	-0.47	-0.54	-0.74	-0.83	-0.63	-0.37	-0.05

The Grant series of " X " sections vary in thickness to suit practically any size of model. The X—9 has proved very successful for power-duration, and both this and the thinner designs are suitable for rubber models. The complete range can be found in Grant's " Model Airplane Design."

R.A.F. 32

Station ...	0	2.5	5.0	10	20	30	40	50	60	70	80	90	100
Upper ...	3.42	6.52	7.84	9.72	11.92	12.98	13.1	12.46	11.06	9.1	6.56	3.6	0.12
Lower ...	3.42	1.5	0.88	0.3	0.0	0.3	0.7	1.1	1.46	1.6	1.46	0.92	0.12

Models using this section have been consistent prize winners since early times. It is probably the best orthodox section for general use, due to its maximum camber being so far back.

The aerofoils given above are, with one or two exceptions, all comparatively new or unknown to British readers, but their publication does not, of course, mean that all other sections are now out of date. Many of the Gottingen range for example will always have their supporters amongst sailplain enthusiasts ; the N.A.C.A. sections have a variety of uses ; while the famous Eiffel sections will continue to enjoy a deserved popularity. Thirty-six sections (of which four only are duplicated here) will be found in *Airfoil Sections* by R. H. Warring (Harborough 2/-) covering all the better known aerofoils suitable for model use. These incidentally are also available as airfoil sheets containing thirty-one accurately drawn profiles of each section ranging from 9in. chord to 3in. chord by 1/5in. steps at 6d. per sheet from the same publishers, and have proved a boon to many enthusiasts who lack confidence in their ability to re-draw profiles.

AEROBATIC CONTROL LINE SCHEDULE

by R. H. Warring

Reprinted from August 1948 Aeromodeller

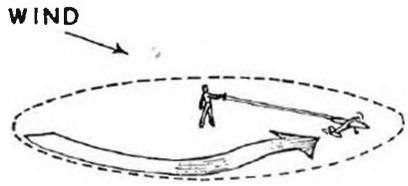

TAKE OFF

With only moderate power available, never pull model off sharply with full-up elevator—it will tend to mush or stall. Best practice is to complete a few yards run with elevators neutral and then ease elevators up for safe climbing angle. With excess power model *can* be taken straight off.

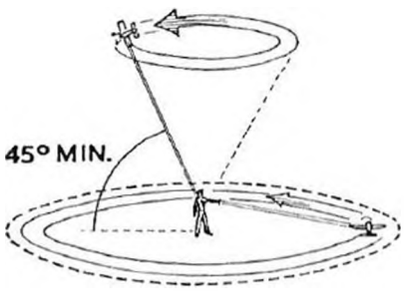

LEVEL FLIGHT

For less critical control, keep whole arm and wrist straight—move whole arm up and down for control. Some models tend to climb into wind more than others, so correct by experience. To hold high-level flight, climb to necessary height and hold on enough elevator to maintain this height. Be ready to step back—and apply down elevator at the same time—if lines slacken.

All stunt models should hold 45 degrees min. bank with ease—lines slackening indicate lack of power, incorrect rigging, or more rudder offset required.

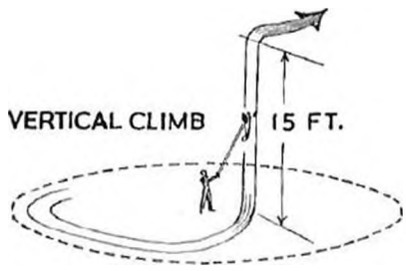

CLIMB

Full-up elevator from low-level flight—ease off as soon as model reaches vertical and hold on that elevator required to maintain vertical. Recover with full-down elevator as soon as enough height has been reached (*i.e.*, model has covered 15 ft. minimum vertical flight required) or lines show signs of slackening. True vertical may be difficult to judge at first unless there is a suitable background, *e.g.*, trees or buildings.

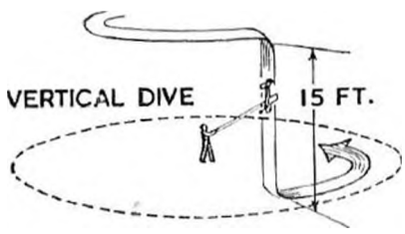

DIVE

Full-down elevator from high-level flight—ease off as model reaches vertical attitude and hold on elevator required to keep vertical. Start recovery—full-up elevator—with ample height to spare for pull-out. Short, near-vertical dives should be practised first to judge initial height required for satisfactory performance.

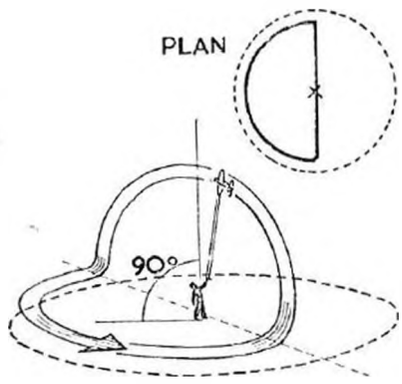

WING-OVER

Full-up elevator from low-level flight—ease off to vertical climb and *hold* model in this position. Recover normal flight attitude at bottom of dive with full-up elevator.

Practice is necessary to get a true wing-over—complete lack of horizon or other reference overhead making judgment difficult. An easy manoeuvre on short lines—so practise with these first.

A good stunt model will wing-over on long lines with little or no tension at the top point. If in doubt, or the pilot loses sight of the model, it is generally best to recover "blind" with full-up elevator.

INSIDE LOOP

Put model into vertical climb and hold until line angle is approximately 45 degrees. Then full-up elevator and hold on until loop is completed.

If there is a wind, carry out this manoeuvre downwind. With properly trimmed model and good power there should be no need to step back to maintain line tension.

Consecutive loops: Unless model has at least 15 ft. height in hand at bottom of first loop, flatten out each climb part of successive loops at point "A" by easing off elevator—otherwise height will be lost on each loop and model may strike ground.

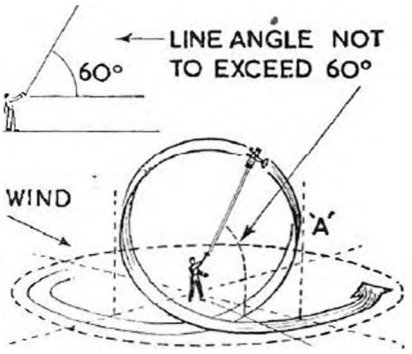

SQUARE INSIDE LOOP

Vertical climb from low-level flight—recover when lines pass 45 degrees with full-up elevator, easing off to neutral to maintain *inverted* high-level flight for half a lap. (CAUTION: Controls are reversed in inverted position—until familiar with this it is easy to put model into an inverted dive, in which case put on full-*down* elevator and recover properly when model is upright once more.)

Full-up elevator at end of inverted leg and ease off for vertical dive—recover in good time.

An elevator range of at least 40 degrees is desirable.

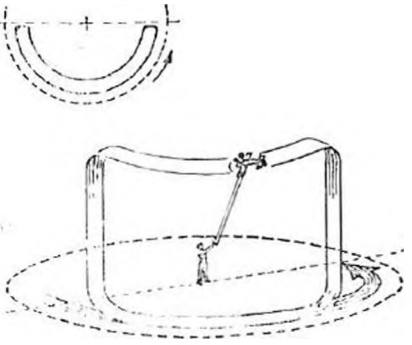

INVERTED FLIGHT

Complete one half of a loop, ease elevators to neutral at top when model will be in inverted position with ample height in hand. SINCE CONTROLS ARE NOW REVERSED PRACTICE IS NEEDED TO MAINTAIN SMOOTH CONTROL—the "instinctive" correction is now the wrong one!

If the pilot gets into trouble at first, he should, as a general rule, put on full-*down* elevator, and hold until model reaches upright position again and recover from there. The common error is to start an inverted dive and try to recover with up-elevator.

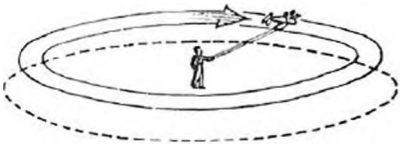

OUTSIDE LOOP

Hold high-level flight—as high as is safe (line angle 60 degrees).

Put on full-down elevator and hold. Recover to normal flight at completion of outside loop.

Once familiar with model's behaviour starting height can be adjusted accordingly—but start initially with ample height and step back quickly if necessary should lines slacken off.

For *consecutive loops* flatten climb at point "A" on *each* loop.

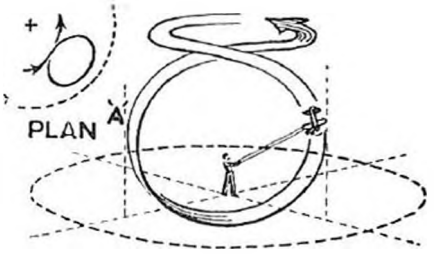

OUTSIDE LOOP

From low-level inverted flight, start vertical climb with full-down elevator and ease off. Apply full-down elevator again when lines reach 45 degrees and hold on. Recover by easing off down elevator at completion of loop.

For consecutive loops flatten out each climb as above *unless* there is at least 15 ft. to spare at bottom of loop.

NOTE.—Up and down elevator range should be identical for inverted flight manoeuvres.

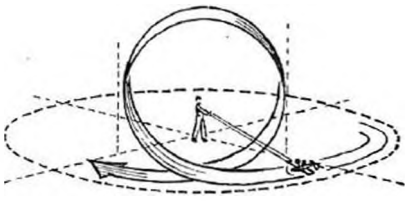

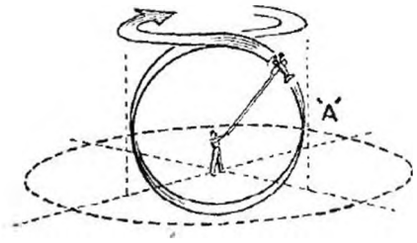

INSIDE LOOP

Hold high-level *inverted* flight—60 degree line angle.

Put on full-up elevator and hold.

Recover by easing off elevator at completion of loop.

For *consecutive loops* ease off up elevator slightly at point " A ", full-up elevator at top again. This will prevent loss of height on each loop.

When familiar with model's performance, starting height may be adjusted accordingly—the lower it is the more spectacular the manoeuvre.

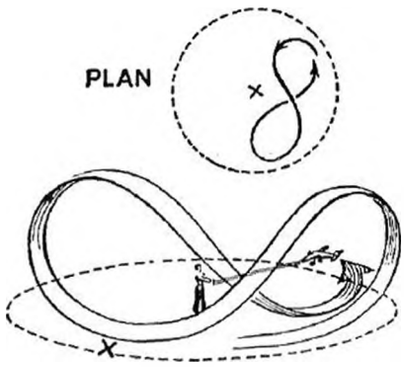

HORIZONTAL FIGURE " 8 "

Once familiar with reversed controls in inverted flight position, this manoeuvre is comparatively simple. A normal inside loop is started from low-level flight, but the second part on the loop is turned into an inverted dive by slight down elevator.

Recover with full-down elevator and hold until model is at top of second loop (now upright again).

Ease off down elevator and make necessary recovery with up elevator. Until the pilot is thoroughly familiar with the fact that controls are not " instinctive " when inverted there is a danger of pulling the model into the ground at point " X."

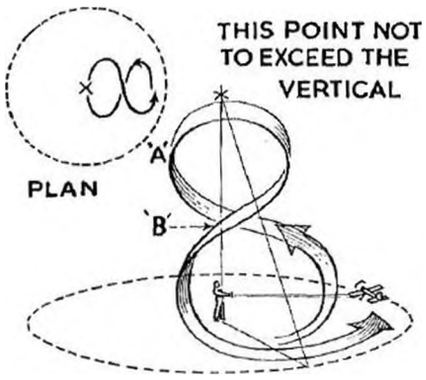

VERTICAL FIGURE " 8 "

Start a tight loop from low-level flight with full-up elevator. Apply full-down elevator quickly just before top of this loop and hold until upper (inverted) loop is completed. Flatten out this loop by momentarily easing off elevator at point " A " if line angle is less than 60 degrees—otherwise there will be insufficient height for completion of manoeuvre.

On completion of upper (inverted) loop, recover with full-up elevator, stepping back smartly if necessary to maintain line tension.

For the first attempts, break off manoeuvre at point " B."

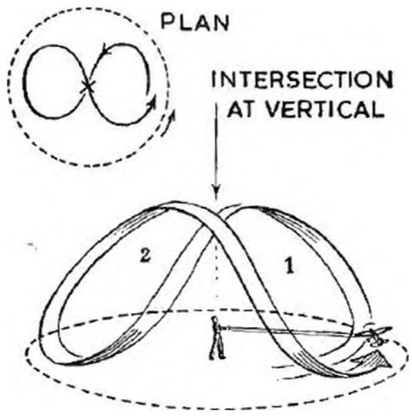

OVERHEAD FIGURE " 8 "

This is really a combination of two wing-overs, one in inverted flight.

From low-level flight first practise part (*i*) until the model can readily be made to pass directly overhead.

To complete " 8," start part (*i*) and when model is directly overhead apply slight down elevator. Recover at low-level inverted flight with more down elevator; level out and start inverted climb, aiming to bring model back directly overhead at top of climb.

At top of climb apply slight up elevator and recover normal flight position.

Familiarity with control reversal in inverted flight is essential for success with this manoeuvre.

SQUARE OUTSIDE LOOP

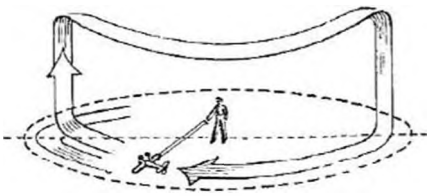

This manoeuvre is carried out exactly as for Square Inside Loop with the exception that it is started from low-level inverted flight and thus control movements are reversed throughout.

Familiarity with inverted flying technique is essential for success.

VERTICAL "S"

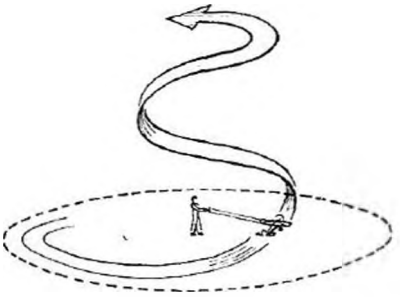

The Vertical "S" is a comparatively simple manoeuvre.

Start a normal inside loop from low-level flight. Apply full-down elevator at top of this loop and hold until model completes "S." Recover at high-level flight or dive away, as found best. A powerful motor is needed and the model should have no tendency to slacken off lines at high altitudes.

This manoeuvre is far more spectacular—and dangerous!—if started from high-level flight downwards.

LANDING

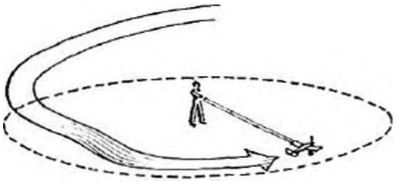

Landings definitely need a little care. Some models tend to float when the motor cuts.

In all cases, best practice is to make a glide approach with slight down elevator—never put on up elevator immediately after the motor has cut—and ease up very gradually to a three-point landing.

Most common error is to flatten out for the landing above ground level, with the result that the model flops in or bounces badly.

Quite a number of models will make a smooth "wheel" landing if simply held in a shallow glide with power off.

SPEED CONTROL LINE CLASSIFICATION

Motor Class	Line Length	Laps per Mile	Record Distance in laps.
Class I. Motors up to 1.5 c.c.	26¼ft.	32	8
Class II. Over 1.5 to 2.5 c.c.	35ft.	24	6
Class III. Over 2.5 to 5 c.c.	52½ft.	16	4
Class IV. Over 5 c.c. to 10 c.c.	70ft.	12	3

An allowance of 18 in. may be deducted from these lengths for length of arm (*i.e.* Class I length would then be 24¾ ft.), and distance is measured from centre line of aircraft, which will further reduce line length according to model. Record runs must be made over a distance of ¼ mile and model must not exceed a height of 10 ft. in case of Classes I and II or 15 ft. in Classes III and IV. No anti-whip pylon arm rest has yet been instituted for British records, but entrants can be disqualified for deliberate whipping over the timed distance.

GLOSSARY OF COMMON MODEL AIRCRAFT TERMS

ACETONE, a solvent used in the making of celluloid cements and dopes. Also used as a solvent in " hot " fuels such as methanol based glow-plug mixtures.
AEROFOIL SECTION, the profile given by the cross section of a wing. (See also Wing Section).
AERODYNAMICS, the science of the theory of flight.
AEROMODELLING, the art of building and flying model aircraft.
AIRFLOW, the path taken by the air around any solid body.
AIRSCREW, component by which motive power is converted into thrust.
AIR INTAKE, tube through which air is sucked into a motor to combine with vaporised fuel.
AMERICAN BROWN, special type of rubber strip much favoured for contest work.
AMYL ACETATE, a solvent used in making of celluloid cements.
AMYL NITRATE, an additive for certain compression ignition fuels. To be used with caution on account of highly detonative qualities.
ANGLE OF ATTACK, attitude at which the model or components thereof meet the air.
ANHEDRAL, the angle formed by setting the wing tips at a lower level than the centre section.
ASPECT RATIO (A.R.), the factor obtained by dividing the measurement of span by the measurement of mean chord.
AUTOGIRO, an aircraft whose lift is provided by freely rotating horizontal vanes.

BALSA, light wood extensively used in model aircraft construction.
BAMBOO, wood used for undercarriage legs, wing tips, etc.
BAMBOO PAPER, stout paper covering, mainly used on larger models. Now virtually unobtainable.
BANANA OIL, nitrous based mixture used to fill pores of balsa or for waterproofing tissue covering.
BEAM MOUNTING, method of fixing engine on parallel hardwood blocks attached to the fuselage.
BIPLANE, an aircraft with two superimposed mainplanes.
BOBBIN, a flanged reel for the retention of a rubber motor.
BOUNDARY LAYER, the thin layer of air adjacent to a surface.
BOX SPAR, light hollow member built up from sheet and strip material.

CABANE, centre section strutting supporting a mainplane.
CABIN MODELS, a model aircraft in which a pilot's cabin has been installed.
CANARD, a design with stabiliser in front of the mainplane.
CAP-STRIP, narrow sheet strip cemented around rib profile, making T-section of same.
CASTOR-OIL, an occasional constituent of diesel engine fuels. Also used for lubricating rubber motors.
CEMENT, a cellulose adhesive.
CENTRE OF GRAVITY (C.G.) point at which complete model balances in all directions.
CENTRE SECTION, portion of wing connected to fuselage and to which the wing panels are attached.
CHORD, distance measured from the leading edge to the trailing edge of a wing.
C.L.A., centre of Lateral Area.
COLOURED DOPE, a dope (q.v.), available in all colours for finishing models.
COMPRESSION RATIO, the ratio by which the maximum pressure of gases in a cylinder are compared to normal atmospheric pressure.
COMPRESSION, amount of resistance by a piston to turning over of an engine, depending on the degree of accuracy in the construction of a motor.
COMPRESSION IGNITION ENGINE (also known as diesel engine), an internal combustion engine that relies on detonating qualities of the fuel under pressure for combustion in lieu of spark ignition.
CONCOURS D'ELEGANCE, a " Beauty " contest for model aircraft.
CONTRA PISTON, device for adjusting compression of a " diesel " engine.
CONTRA PISTON LEVER, turnscrew of lever to facilitate adjustment of contra piston.
CONTROL LINE, twin or single lines or threads by which pilot retains control of model flying in circles about him.
CONTROL LINE FLYING, method of flying an aircraft in which pilot retains control by means of lines attached to the aircraft via a control plate, enabling up and down movement of the elevators to be made thus performing any flight pattern on a vertical axis.
CROSS BRACE, cross members connecting the two side frames of the fuselage.
CUMULUS, type of woolly cloud that betokens presence of thermals.

DECALAGE, difference between the angles of incidence of a multi planed aircraft.

DETHERMALISER, a device fitted to limit duration of model by spoiling flight.

DIESEL ENGINE, see compression ignition engine.

DIHEDRAL, the angle obtained by raising the wing tips above the centre section.

DOLLY, small trolley, usually three wheeled, on which a model rests during take off, but which remains on the ground after the model is airborne.

DOPE, chemical mixture with a cellulose basis, used on tissue or fabric covering of an aircraft. Sometimes used to refer to fuel mixture for power models.

DOWN THRUST, downward tilting of the thrust line.

DRAG, retarding force acting on a body whilst passing through the air.

DURATION MODEL, model designed primarily for maximum duration of flight.

ELEVATOR, that part of a tail unit which by an up and down movement alters the trim of the model.

ELEVATOR HINGE, a hinge joining elevator to tailplane.

ELEVATOR HORN, a metal or wire plate attached to elevator to enable pilot to control its movement and thus control flight of model.

ELLIPTICAL WING, a tapered wing in which the chord reduces in plan form by a regular ellipse towards the tip.

EMPENNAGE, term embracing all tail surfaces, fin and rudder of an aircraft.

ETHER, main constituent in fuel mixtures for " diesel " engines.

EVEN CHORD, form in which leading and trailing edges of a wing are parallel.

F.A.I., Federation Aeronautique Internationale, world governing body of aviation and model aeronautics.

FAIRING, filleting of the angle between intersecting surfaces.

FILLER, a mixture spread on wood to close pores before finishing. Also a spouted bottle containing fuel for power models.

FIN, vertical surface by which directional stability of model is controlled.

FLYING BOAT, an aircraft with boat shaped body which takes off from and lands on water.

FOLDING PROPELLER, type in which blade or blades are hinged and fold back along sides of fuselage at the end of power run.

FORMERS, shaped parts cut from sheet material.

FREEWHEEL, device by which the propeller continues to turn freely after completion of power run.

FREE FLIGHT, any flight where model is not under the direct control of the pilot when airborne.

FUSELAGE, the part of an aircraft to which all flying surfaces are attached.

FUSELAGE FORMULA, minimum standard permitted by governing bodies for fuselage's frontal area of models entered in official contests.

GAP, distance between the mainplanes of a multiplane aircraft measured vertically.

GAS MODEL, slang term (U.S.A.) for petrol engined model.

G-CONTROL, a form of control line flying developed in U.S.A. where a single line only holds the machine and imparts a limited measure of elevator control. Has recently been improved with two line control.

GLIDE, flight unassisted by any form of propulsive mechanism.

GLIDER, a model where flight is unassisted by any form of propulsive mechanism.

GLOW PLUG, a hotwire plug that takes the place of conventional sparking plug and dispenses with need for electrics after starting of a high compression i.c. engine.

GREMLIN, a mythical imp discovered by the R.A.F. which can be held responsible for all untoward flight incidents.

HAND LAUNCH, a take off where the flyer releases the model from his hands, as opposed to rise off ground (R.O.G.) or tow launch.

HELICOPTER, an aircraft which is maintained in flight by circular rotation of its mainplanes.

HIGHWING, type of model in which the wing is situated on top of the fuselage.

HORN (see elevator horn).

HYDRAULIC LOCK, a temporary seizure of an engine by reason of excess of fuel.

HYDROPLANE, a machine built for R.O.W. (rise off water).

HYDULIGNUM, a special resin-bonded multi-ply wood used in manufacture of airscrews.

IMPULSE DUCT MOTOR, a form of jet motor.

INCIDENCE, angle at which any component is aligned in relation to the fuselage datum line.
INDOOR MODEL, specialised type of exceedingly light model to be flown in halls or large rooms.
INSTABILITY, state of model that through incorrect areas or trim fails to keep a steady flight path.
INTAKE (see air intake).

JAP TISSUE, a fine grade light tissue used for covering light and medium weight models. Now almost unobtainable.
JET MOTOR, a propulsive duct that has been developed in a variety of forms, the main feature of which is the compression of air taken in through the front and expelled through the rear to induce forward motion.

LAMINAR FLOW, steady non-turbulent air-flow.

LAMINATION, several layers of wood stuck together for added strength.
LATERAL STABILITY, the quality of returning to the correct flight attitude, in lateral and directional planes after an upset.
LEADING EDGE, the front member on wing, tail and fin.
LIFT, term denoting the upward force obtained by the passage of an aerofoil through the air.
LIFT/DRAG RATIO (L/D) figure obtained by dividing the lift by the drag. A measure of efficiency.
LIFTING TAIL, tailplane which employs a cambered section.
LOCK (see hydraulic lock).
LONGERONS, main fore and aft members of the fuselage.
LONGITUDINAL STABILITY, as lateral stability but in the direction of flight.
LOOP, a complete circle in a vertical plane by an aircraft.
LOW-WING, type of model in which the mainplane is situated at the bottom of the fuselage.

MAINPLANE, term denoting the main lifting surface or wing of the plane.

METHANOL, main constituent of " glow plug " and other " hot " fuels.
MICROFILM, extremely thin material used for covering indoor models. Obtained by pouring cellulose compound on water.
MIDWING, type of model in which wing is situated at a point between top and bottom of fuselage.
MOMENT ARM, measurement coupling distance between the C.G. of the model and the c/p of tailplane.
MOTOR, power unit of a model, either internal combustion, jet or rubber.
MOTOR HOOK, front or nose-hook that receives one end of a rubber motor.
MOTOR RUN, length of time that motor takes to unwind in case of rubber motor; or, with power models length of engine run, usually limited in contests.

NEGATIVE INCIDENCE, term describing position where the trailing edge is placed at a higher point than leading edge in relation to datum line.
NEUTRAL SECTION, aerofoil in which both upper and lower profiles are identical.
NITROPROPANE, a constituent of certain " glow-plug " fuel mixtures.
NOSEPIECE, component at front of fuselage which carries prop shaft.
NOSEPLUG, shaped piece on rear of nosepiece which fits into front former on fuselage.
NYLON, a cellulose material highly esteemed for covering wings, etc., of larger models. Also available as fine line for glider launching.

ORNITHOPTER, an aircraft in which flight is obtained by movement of the wings.

PARACHUTE, silk or tissue " air envelope " attached to model for delayed release, thus spoiling flight (see dethermaliser).
PARAFFIN, constituent of some diesel fuels.
PARASOL WING, type in which the mainplane is situated at a point above the top of the fuselage.
PERSPEX, proprietary brand of transparent sheeting used for cabin windows, etc.
PETROL ENGINE, model i.c. engine of spark ignition type.

PIANO WIRE, hard steel wire used for undercarriages, prop shafts and many other purposes. Available in variety of thicknesses.
PISTON, cylindrically shaped metal component that moves in cylinder of internal combustion engine.
PITCH, theoretical distance travelled by the propeller in one revolution if there were no slip.
POLE FLYING, indoor flying in which model is tethered to a central pole or pylon.
POLYHEDRAL, type of dihedral in which two or more different angles are incorporated.
POSITIVE INCIDENCE, angle obtained by setting leading edge at a higher point than trailing edge in relation to datum line.
POWER MODEL, a model driven by some form of mechanical drive other than a rubber motor.
POWER/WEIGHT RATIO, relation between power output and weight of a model engine.
PREWOUND MOTOR, a rubber motor which has been partially wound up for tensioning purposes between front and rear hooks.
PRIMER, undercoat applied to models as a base on which final coats of paint may be applied.
PRIMING, adding fuel through exhaust ports to facilitate starting of an internal combustion engine.
PROPELLER, see airscrew.
PROTOTYPE, first model of a series, from which other designs are evolved.
PUSHER, type of model in which the propeller pushes the machine through the air.
PYLON, a pole or stand from which models may be flown tethered in a circular flight path.
PYLON WING, type in which mainplane is situated at a point above the top of the fuselage affixed to a projecting pylon-like fixing. (See also Parasol wing.)

RAG TISSUE, British covering tissue of considerable strength when doped, largely used as substitute for unobtainable foreign tissues.
RETAINER, small device fitted to the end of propeller shaft to retain propeller in position.
RETRACTIBLE UNDERCARRIAGE, undercarriage incorporating a device which folds it into the wing or fuselage in flight.
RIB, an aerofoil member forming part of a wing, etc.
ROOT RIB, rib situated at the root or centre section of a wing.
RUBBER, strip of elastic forming motive power of rubber driven models.
RUBBER BAND, small circular bands of rubber used for attaching wings or other components to a model.
RUDDER, that part of fin (q.v.) which may be adjusted to control direction of flight.

SAILPLANE, soaring form of model similar to glider (q.v.).
SCALE MODEL, model based on outline specifications of a full-size machine.
SKIN FRICTION, drag due to the viscosity of air.
SLABSIDER, type of model incorporating a flat sided fuselage, usually of box section.
SLIP, the difference between pitch and actual advance per revolution of airscrew.
S.M.A.E., Society of Model Aeronautical Engineers, the body delegated by the Royal Aero Club to control national and international contests in this country.
SPACERS, upright cross members connecting the longerons.
SPAN, distance from wing tip to wing tip.
SPAR, intermediate members supplementary to leading and trailing edges of a wing, running spanwise.
SPAT, streamlined covering housing undercarriage wheel.
SPEED MODEL, a design built entirely for high speed performance.
STAGGER, the distance between the leading edges of a multiplane aircraft measured in an horizontal plane.
STALL, the breakdown of airflow over an aerofoil resulting in less lift and high drag.
STREAMLINER, a model designed for low drag, usually with fuselage of circular or elliptical cross section.
STRETCH WINDING, in which rubber motor is stretched to three times normal length or more whilst winding on turns.
STRINGER, light fore and aft members of a fuselage.
STUNT MODEL, usually applied to control line model designed for a variety of flight patterns.
SUPERFINE, light grade of Jap tissue used in covering models.
SWEEPBACK, a backward inclination of the leading edge of the wing.
SYMMETRICAL SECTION, see Neutral section.

TAILLESS MODEL, a design without stabilising surfaces at the rear which obtains lateral and longitudinal stability by devices built into mainplane.
TAILPLANE, surface situated at rear of fuselage by which fore and aft stability is obtained.
TAILSKID, light sprung member supporting rear of the model.
TAKE-OFF, action of leaving the ground by an aircraft under power.
TAPERED WING, a wing with tip chord less than root chord.
TENSIONER, mechanical means of preventing slack length of rubber motor from shifting in fuselage.
THERMAL, current of air travelling upwards.
THREEPOINT LANDING, a perfect landing in which an aircraft touches ground on both wheels and tailskid.
THRUST, a force by which model is propelled.
THRUST LINE, line at right angle to the propeller.
TORQUE, action set up in which model tends to revolve in an opposite direction to that of the propeller.
TRACK, distance between wheels of the undercarriage.
TRACTOR, model where airscrew pulls the model through the air.
TRAILING EDGE, rear member of wing, tail or fin.
TRICYCLE, undercarriage employing three wheels.
TRIM, process by which the model is erected and trued for flight.
TRIPLANE, an aircraft employing three mainplanes,
TURBULENT FLOW, airflow in which there is an unsteady and varying movement of particles.
TWIN RUDDER, design employing two fins.

U-CONTROL, branch of model flying in which pilot retains control of model via two wire or thread leads, which act on a pivot and enable elevator movement, making possible all flight patterns on a vertical axis.
UNDERCARRIAGE, structure which takes landing shocks of a model and supports it during take-off when fitted with wheels or skids.
UNDER CAMBER, applied to lower profile of wing sections in which the line describes an upward arc.
UNDER POWERED, describes a model with insufficient motor power to perform work required of it.
UP-THRUST, opposite action to down thrust, sometimes employed to obtain greater flying angle, especially with low wing models.

WAFTER, type of propeller with abnormally large blade areas and pitch.
WAKEFIELD type rubber model built to specification formulated for Wakefield Trophy competition. Wing area must be between 190—210 sq. ins., tailplane area 33% of mainplane, cross section, length squared divided by 100, and total weight not less than 8 ozs.
WASHIN, warp of a wing increasing angle of attack towards the tip.
WASHOUT, warp of a wing decreasing angle of attack towards the tip.
WATER DOPING, practice of wetting tissue covering with water for shrinkage purposes, prior to application of cellulose dope.
WINDER, mechanical device, usually a geared hand brace, used for winding a rubber motor.
WINDSOCK, an open ended drogue mounted on a pylon to indicate wind direction to flyers.
WIND TUNNEL, apparatus producing an artificial air stream for testing parts or the whole of an aircraft under flight conditions.
WING, see Mainplane.
WINGOVER, an elementary flight pattern in control line flying.
WING SECTION, see Aerofoil.

YAW, a left or right turning movement about the line of forward flight.

ZERO INCIDENCE, where neither positive nor negative incidence is incorporated.
ZERO LIFT, angle at which an aerofoil exerts no lift.

The Saga of Sandy McGuire

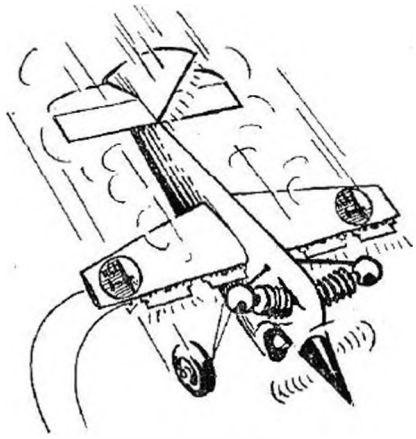

1

His corpse they wrapped up in tissue,
His hearse was the treasurer's jeep.
A large model box was his coffin,
When they buried him full six foot deep.

2

His "Super Stunt Tripe" was beside him,
At his feet lay a new coil of wire;
And in his right fist a control grip,
As they buried poor Sandy McGuire.

3

And this is the tale of his passing—
For he died the enthusiasts' way;
He died in a centralised contest
In England one wet summer's day.

4

On the well worn patch by the tarmac,
Where the grass grows sparse and thin,
Sandy McGuire, in control line attire
Dreamed of the cup he would win.

5

His model was all metal covered,
The engine a 10 c.c. twin;
The wings were short, shiny and stubby,
And sharp as a razor the fin.

6

He set her down on the greensward
And brimful he filled up the tank.
The engine it started its roaring
At his first experienced yank.

7

Holding hard the control grip,
His assistant he told to let go.
He braced himself for the struggle,
For her flying had never been slow.

8

He gave her a couple of circuits,
Then immediately started to stunt.
He rolled her off from a half loop,
And then slipped her into a bunt.

9

He flew her around then inverted,
And did one or two outside loops;
Then dived her down vertically,
And up in a series of swoops.

10

The crowd were all cheering quite madly—
They never had seen such displays
As Sandy McGuire was then giving:
For this was his finest of days.

11

Then suddenly came disaster,
As the sun got into his eyes.
Or perhaps it was too much Scotch whisky—
(The latter, I fear or surmise).

12

The control lines they knotted and crinkled,
As the model began to turn in.
The motor screamed loud in its death song,
Soul destroying and horrible din.

13

A second passed so very slowly—
The crowd was so still and so hushed.
The model screamed onwards towards him:
His feeble frame buckled and crushed.

14

As his life's blood soaked into the turf
These last parting words he did say:
"My funeral won't cost you a farthing,
I'm insured with the old N.G.A."

15

Thus quietly he died in the sunlight:
His life's shortened course was now run.
By insuring himself and his model,
He knew that his duty he'd done.

16

So take heed you control line fanatics,
And please do not think that I lie;
See that you're all insured for disaster,
And here's to the next one to die.

Bob Copland in characteristic pose, as his latest Wakefield takes the air. In spite of the advent of many new stars Bob still continues to shine, and his name will usually be found well up the list in major rubber contests.

1948 CONTEST RESULTS

Results of S.M.A.E. Contests are published on the following pages, together with details of principal events outside the official S.M.A.E. programme, but taking place under their auspices. To include particulars of all club and area rallies would require far more space than is available, but we shall nevertheless be glad to hear from Club secretaries who feel that their meetings are of sufficient importance to justify inclusion in future Annuals.

April 4th.—GAMAGE CUP

Open Rubber. Decentralised.

1	H. Tubbs	Leeds	737.5
2	A. B. Munden	Blackpool	521.9
3	F. E. Dewell	Middlesbrough	500.6
4	C. J. Davey	Blackpool	464.4
5	R. Calvert	Bradford	459.5
6	J. Bowerman	Kingsbury	455.5
7	M. N. Mackay	Edinburgh	454.5
8	R. T. Parham	Worcester	450.2
9	F. Best	Leeds	443
10	R. Hinks	Luton	374.75
11	A. G. Glennie	Brentford	374.7
12	J. North	Croydon	374.2

(158 *entries from* 45 *clubs*)

April 4th.—FROG JUNIOR CUP

Open Rubber. Decentralised.
(*Incorporated in Gamage Cup.*)

1	N. J. Hocking	Greenford	321.2
2	T. W. Geesing	Croydon	295
3	P. Flower	Hayes	270.5
4	J. Wingate	Streatham	261.7
5	J. P. Watkins	Croydon	242
6	V. Johnson	Southampton	238
7	J. Holmes	Blackheath	210.4
8	S. Jones	West Essex	193
9	V. Welch	Potters Bar	185
10	J. Anstead	Greenford	176.7
11	B. Kreeger	,,	172
12	J. O'Donnell	Whitefield	162

(31 *entries from* 21 *clubs*)

April 11th.—M.E. No. 1 CUP

Team Glider. Area Semi-Centralised.

1	Croydon	1777.8
2	Hayes	1644
3	Birmingham	1635.8
4	South Nottingham	1617.4
5	Worcester	1545.6
6	Bushy Park	1474.7

April 11th.—FLIGHT CUP

Open Rubber. Area Semi-Centralised.

1	D. Lees	Bradford	824.2
2	R. Woodhouse	Whitefield	753
3	P. Ladd	Croydon	681.3
4	R. J. North	,,	655.5
5	P. Cock	Southampton	644
6	H. W. Revell	Northampton	640.6

May 2nd.—JUNIOR CONTEST

Unrestricted Rubber. Area Semi-Centralised.

1	P. Elton	Birmingham	502.4
2	I. Dowsett	Brentford	454.4
3	G. Watts	Northampton	444
4	A. Hicks	Willesden	400
5	H. Preeger	Greenford	285.7
6	D. Bennett	Whitefield	265
7	J. Sandell	Southampton	228.9
8	D. Marquis	Eston	226
9	R. Cole	Swansea	222.3
10	W. Schofield	Ashton	220.6
11	D. Hill	Wolves	220
12	D. Arnold	Southampton	212.4

(57 *competitors*)

May 2nd.—OPEN POWER DURATION

Ratio System. Area Semi-Centralised

1	E. Kirkham		16.66	ratio
2	J. Howard	North Kent	14.75	,,
3	Richardson	Southend	13.27	,,
4	N. Marcus	Croydon	12.54	,,
5	R. Moulton	West Essex	9.53	,,
6	N. Pilgrim	Birmingham	8.09	,,
7	Mrs. Gunter	Bushy Park	8.01	,,
8	S. Eckersley	Bradford	7.76	,,
9	S. Collins	Northern Heights	7.36	,,
10	R. Watson	Watford	7.18	,,
11	N. J. Butcher	Hastings	7.00	,,
12	G. Moss	Northern Heights	6.7	,,

(167 *competitors*)

May 2nd.—GUTTERIDGE TROPHY

Rubber-Wakefield Models. Area Semi-Centralised.

1	E. W. Evans	Northampton	624
2	H. W. Revell	Northampton	619
3	R. H. Warring	Zombies	590.4
4	R. Copland	Northern Heights	544
5	D. Harrison	Birmingham	537.4
6	B. Haisman	Wallasey	513
7	N. Coxon	Southampton	504.2
8	P. Elton	Birmingham	502.4
9	P. J. Snowden	Northampton	483
10	C. Doughty	Birmingham	477.8
11	R. Clements	Luton	477
12	F. Smith	Northampton	470.5

May 16th and 17th.—THE NATIONALS

Held at Sywell Aerodrome, Nr. Northampton.

Senior Champion W. Archer Cheadle
Junior Champion J. Clark Wolverhampton

SIR JOHN SHELLEY CUP (456)

Power Duration.

1	W. Archer	Cheadle	300
2	E. Keil	West Essex	281.2
3	N. Lees	Bradford	237.2
4	G. Kimberley	Birmingham	220.1
5	J. H. Knight	North Kent	197.5
6	Mrs. Gunter	Bushey	186.5

PILCHER CUP (361)

Open Glider.

1	J. W. Palmer	Norwich	296.05
2	M. Hansom	Kingsbury	267
3	P. Guilmant	Southampton	237
4	D. W. Harrison	Birmingham	232
5	D. Butler	Surbiton	229
5	B. E. Woollams	Watford	229
6	J. Clark	Wolverhampton	212

MODEL ENGINEER No. 2 CUP (344)

Open Rubber.

1	R. Ladd	Croydon	301.6
2	A. D. Piggott	Croydon	291.8
3	E. W. Evans	Northampton	262.2
4	R. T. Parham	Worcester	258
5	P. B. Ahaker	Surbiton	235
6	H. W. Revell	Northampton	229.4

THURSTON CUP (290)

F.A.I. Glider.

1	R. N. Yeabsley	Croydon	493
2	R. F. Gosling	Merseyside	487
3	B. Teasell	Northern Heights	417.2
4	P. F. Wilson	North Downs	357.5
5	E. King	Leighton Buzzard	354.8
6	G. E. Salt	Birmingham	337.2

Ron Warring takes off in one of this season's contests. Ron is generally regarded as the unluckiest of men for his misfortune in losing his model after best first round score in Wakefield trials—thereby losing a place in the team and a trip to America. Better luck next time!

WOMEN'S CHALLENGE CUP (16)

Rubber.

1	Mrs. Buckeridge	Brentford	247.5
2	Mrs. Smith	Northampton	165.9
3	Mrs. Hinks	Luton	154
4	Miss Gallagher	Northern Heights	97.2
5	Mrs. Stothers	Leicester	94
6	Mrs. L. Clements	Luton	76.6

GOLD TROPHY (67)

Aerobatic Control Line.

1	P. Cock	Southampton	385
2	D. J. Allen	West Essex	375
3	R. Norris	West Essex	229
4	M. Booth	C. M. Zombies	194
5	W. H. Taylor	West Essex	177
6	K. Gregory	C. M. Zombies	162

WESTON CUP (210)

Rubber-Wakefield Models.

1	J. W. Revell	Northampton	342.1
2	R. Copland	Northern Heights	297.6
3	J. Wingate	Streatham	244
4	J. M. Butt	Eastbourne	207.2
5	R. J. Clements	Luton	197.9
6	R. A. Hinks	Luton	187

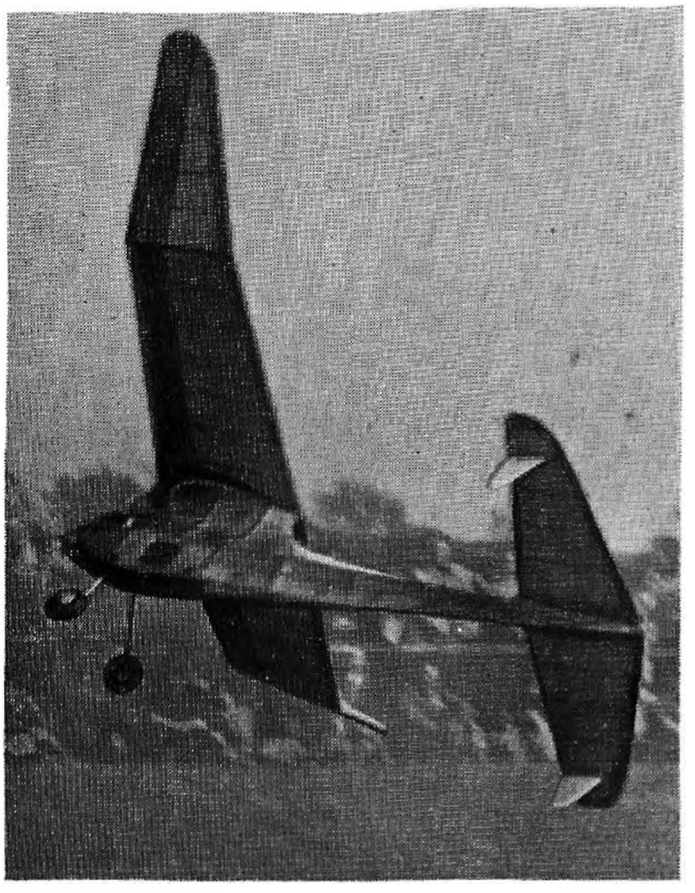

Popular Banshee power model in flight at the Nationals. This design has consistently figured amongst the leaders this season. *Below* : Pete Cock's Gold Trophy Aerobatic Control Line winner—now available in kit form. This stark design has encouraged a number of outline fuselage sidewinders, but only constant practice will produce the Pete Cocks to fly them !

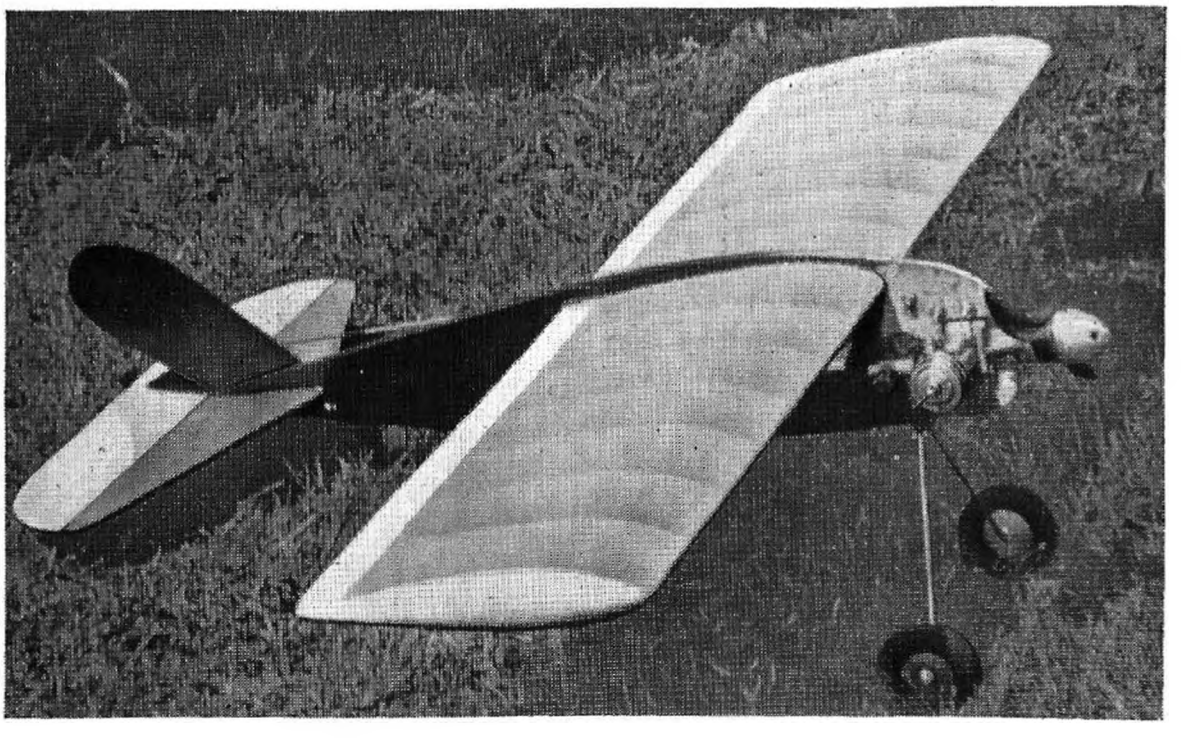

June 6th.—WAKEFIELD TEAM SELECTION TRIALS

	1	2	3	Total
R. B. Chesterton (Northampton)	118.75	218	128.5	465.25
A. D. Piggott (Croydon)	121	177.5	151.5	450.0
R. Copland (Northern Heights)	206	212	Model Lost	418
M. King (W.E.A.)	131	124	114	369
C. Doughty (Birmingham)	214.5	92	61.75	368.25
L. Stott (Bradford)	123	111.25	117	351.25

Possible Reserve.

J. B. Knight (North Kent)	210.25	59	64.6	333.85

June 13th.—K. & M.A.A. CUP

Open Glider. Decentralised.

1	A. H. Taylor	Bushy Park	788.5
2	E. Cotten	Ilford	782
3	A. Sim	Park M.A.L.	752
4	T. A. Geesing	Croydon	750.5
5	E. Denver	Croydon	747
6	S. Kay	Bury	740
7	E. G. Brain	Brixton	726.6
8	R. Pullen	Park M.A.L.	725
	A. J. Hucklesby	Luton	
	N. G. Marcus	Croydon	
9	R. Jessop	Zephyrs	724.4
10	D. Bainbridge	South Nottingham	720
11	J. Evans	Leighton Buzzard	699
12	J. M. Harvey	Gillingham	698

(467 *competitors*)

July 11th.—ASTRAL TROPHY

Power Duration. Centralised.

1	R. H. Warring	Zombies	182.2
2	W. Dean	,,	175.1
3	J. Smith	Hackney	153.8
4	B. Gunter	Bushy Park	148.3
5	P. Chester	Hackney	112.5
6	C. V. Kimberley	Birmingham	100.6
7	P. Field	Belfairs	99.7
8	F. Dewell	Middlesbrough	99.2
9	O. E. Hemsley	Bushy Park	95
10	G. R. Rawlings	Coventry	91.2
11	J. Cox	Northern Heights	87.4
12	W. Dallaway	Birmingham	85.9

(33 *competitors*)

July 11th.—HAMLEY TROPHY

Power Precision. Centralised.

1	A. A. Judge	Barnes	26.6 error
2	D. Taplin	Isle of Thanet	37.8 ,,
3	D. E. Johnson	Warwick	42.4 ,,
4	W. G. Johnson	,,	55 8 ,,
5	P. Field	Belfairs	79.2 ,,
6	S. Valentine	Ilford	85.3 ,,

(31 *competitors*)

July 11th.—TAPLIN TROPHY

Power-Controlled Manoeuvres. Centralised.

1	D. King	Isle of Thanet	40 pts.
2	D. Taplin	,, ,,	30 ,,

July 11th.—AEROBATIC CONTROL LINE

Centralised.

1	R. J. Norris	West Essex	512 pts.
2	D. J. Allen	,, ,,	472 ,,
3	L. Steward	,, ,,	413 ,,
4	P. Cock	Southampton	284.5 ,,
5	K. F. Marsh	West Essex	214.5 ,,
6	W. A. Morley	,, ,,	187 ,,
7	D. Reece	,, ,,	169.5 ,,
8	N. J. Butcher	Hastings	157 ,,
9	H. J. Nicholls	Northern Heights	122 ,,
10	N. Peck	St. Albans	50 ,,
11	W. H. C. Taylor	West Essex	35 ,,
12	J. W. Jones	Birmingham	15 ,,

(15 *competitors*)

July 25th.—LADY SHELLEY CUP

Seaplanes. Decentralised.

1	A. D. Piggot	Croydon	496.4
2	S. Marden	B. & Chiswick	444.9
3	J. Hall	Croydon	430
4	K. Perilli	Brighton	418.8
5	I. Dowsett	B. & Chiswick	404.6
6	F. Hemsley	Southern Cross	370.6
7	J. B. Higgins	B. & Chiswick	338
8	J. R. Millington	Park M.A.L.	313
9	J. C. McKenna	,, ,,	297
10	Lewis	Southern Cross	273.5
11	J. B. Knight	North Kent	261
12	I. Lucas	Brighton	217

(23 *competitors*)

July 25th.—OPEN DURATION POWER

Ratio System. Decentralised.

1	S. Collins	Northern Heights	10.72 ratio
2	G. B. Kimberley	Birmingham	10.25 ,,
3	F. Chatwin	,,	9.64 ,,
4	A. Mussell	Brighton	7.91
5	H. J. Knight	North Kent	7.4 ,,
6	M. Panteney	Eastbourne	6.74 ,,
7	A. Collinson	Bradford	6.66 ,,
8	D. Craggs	Southend	6 51 ,,
9	J. B. Knight	North Kent	6.5 ,,
10	D. North	Cardiff	6.06 ,,
11	P. Welch	Southampton	6.05 ,,
12	J. A. Howard	North Kent	5.68 ,,

(56 *competitors*)

August 1st.—BOWDEN TROPHY

International Power Precision. Centralised.

1	R. Scott	St. Helens	17.3 error
2	J. Bowen	Southgate	18.3 ,,
3	E. Keil	West Essex	21.9 ,,
4	L. Ranson	Essex Power	26.3 ,,
5	R. Duke	,, ,,	26.5 ,,
6	L. V. Lawrence	Isle of Thanet	27.5 ,,
7	R. E. Twiddy	Ilford	34 ,,
8	S. Reynolds	Upton	35 ,,
9	J. Kennedy	,,	59.7 ,,
10	R. Dyball	Blackheath	60.1 ,,
11	F. R. Mallett	Regents Park	78.8 ,,
12	S. A. Miller	Luton	79 ,,

August 1st.—POWER RATIO

International. Centralised.

1	N. Marcus	Croydon	13.7 ratio
2	W. G. Johnson	Warwick	11.4 ,,
3	R. F. Pullen	Park M.A.L.	10.06 ,,
4	R. C. Amor	Ilford	8.8 ,,
5	R. Watson	Northern Heights	8.1 ,,
6	E. Keil	West Essex	7.4 ,,
7	A. G. Russell	North Kent	6.7 ,,
8	J. A. Howard	,, ,,	6.1 ,,
9	J. Smith	Hackney	5.1 ,,
10	H. Chester	,,	4.9 ,,
11	F. Bates	,,	4.7 ,,
	H. J. Knight	North Kent	4.7 ,,
12	J. E. Wingate	Streatham	4.4 ,,

August 15th.—TAILLESS CONTEST.

Tailless Formula Models. Decentralised.

1.	C. M. Holden	Bolton	294.5
2.	M. Farthing	Plymouth	282.5
3.	J. Marshall	Hayes	245.8
4.	R. Teasell	N. Heights	142.4
5.	A. R. Thomas	Blackheath	127.5

(14 competitors—9 failed to make 1 min. qualifying flight).

August 15th.—HALFAX POWER TROPHY.

Power Duration. Area Semi-Centralised.

1.	W. Dean	Zombies	444
2.	R. H. Warring	Zombies	303.2
3.	K. W. Kendall	N. Birmingham	302
4.	T. Watson	Regents Park	290.1
5.	J. B. Knight	North Kent	283
6.	H. Chester	Hackney	276.6

(110 competitors.)

September 12th.—C.S.S.A. CUP.

Open Glider. Area Semi-Centralised.

1.	D. Bennett	Whitefield	601.8
2.	D. Posner	Kingsbury	525.5
3.	H. S. Sayer	Dartford	458.8
4.	E. K. Fitch	N. Heights	444
5.	I. H. Agutter	West Kent	412.1
6.	R. Kendall	Surbiton	405.2
7.	R. N. Yeabsley	Croydon	389
8.	N. Groves	Surbiton	348.1
9.	J. A. Bolton	Potters Bar	347.6
10.	R. Silver	Regents Park	339

September 12th.—NATIONAL TROPHY.

Team Rubber. Area Semi-Centralised.

1.	Croydon	1118.2
2.	Belfairs	609.9
3.	Hayes	596.3
4.	North Kent	542.2
5.	Whitefield	515.6
6.	Durham	426.6
7.	Bradford	395.75
8.	Chelmsford	388.2
9.	Worcester	358
10.	Luton	339.5
11.	Pharos	321.7
12.	Northampton	306.1

September 26th—S.M.A.E. CUP.

Rubber and Gliders. Decentralised.

1.	Mrs. M. Eves	(Upton)	786.
2.	S. Reynolds	(Upton)	750.8
3.	A. W. Green	(West Essex)	642.
4.	R. Yeabsley	(Croydon)	601.9
5.	J. McKenna	(Park M.A.L.)	543.
6.	C. Dawes	(Ravensbourne)	528.6
7.	J. K. Harvey	(Gillingham)	515.3
8.	E. Denyer	(Croydon)	490.2
9.	—. Kreeger	(Brentford)	488.7
10.	D. Butler	(Surbiton)	483.5
11.	I. Fairgreave	(Derby)	475.
12.	D. Posner	(Kingsbury)	474.5

September 26th—WOMEN'S DURATION CONTEST.

Rubber and Glider unrestricted. Decentralised.

1	Mrs M Eves	(Upton)	491.
2.	Mrs. D. Knight	(Nth. Kent)	286.3
3.	Miss D. Lapsley	(Upton)	230.4
4.	Mrs. A. Buckeridge	(Pharos)	200.2
5.	Mrs. E. Dillon	(Liverpool)	194.1
6.	Mrs. E. Whistler	(Crystal Pal.)	117.6
7.	Mrs. L. Clements	(Luton)	107.5
8.	Mrs. M. Garnett	(Bristol & W.)	90.2
9.	Miss S. N. Bell	(Hud'field)	88.0
10.	Mrs. J. Cusach	(Plymouth)	87.7
11.	Mrs. B. Crute	(Torbay)	77.
12.	Mrs. J. Stothers	(Leicester)	69.

PLUGGE CUP.

Club Championship awarded on M.E. No. 1, Flight Cup, National Cup, C.S.S.A. Cup.

1.	Croydon	1091.61
2.	Whitefield	882.17
3.	Hayes	862.58
4.	Luton	801.12
5.	North Kent	778.8
6.	Belfairs	768.9

CATON TROPHY.

Awarded on Gutteridge, Flight and National —Individual Rubber.

1.	H. W. Revell	1480.6
2.	B. V. Haisman	1353.4
3.	R. Woodhouse	1337.

Black Magic, Fred Hempshall's successful semi-scale power model that has achieved wide popularity amongst modellers who like their aircraft to look like aircraft. Black Magic was the 1948 winner of the Bowden International Precision Power Trophy at Fairlop.

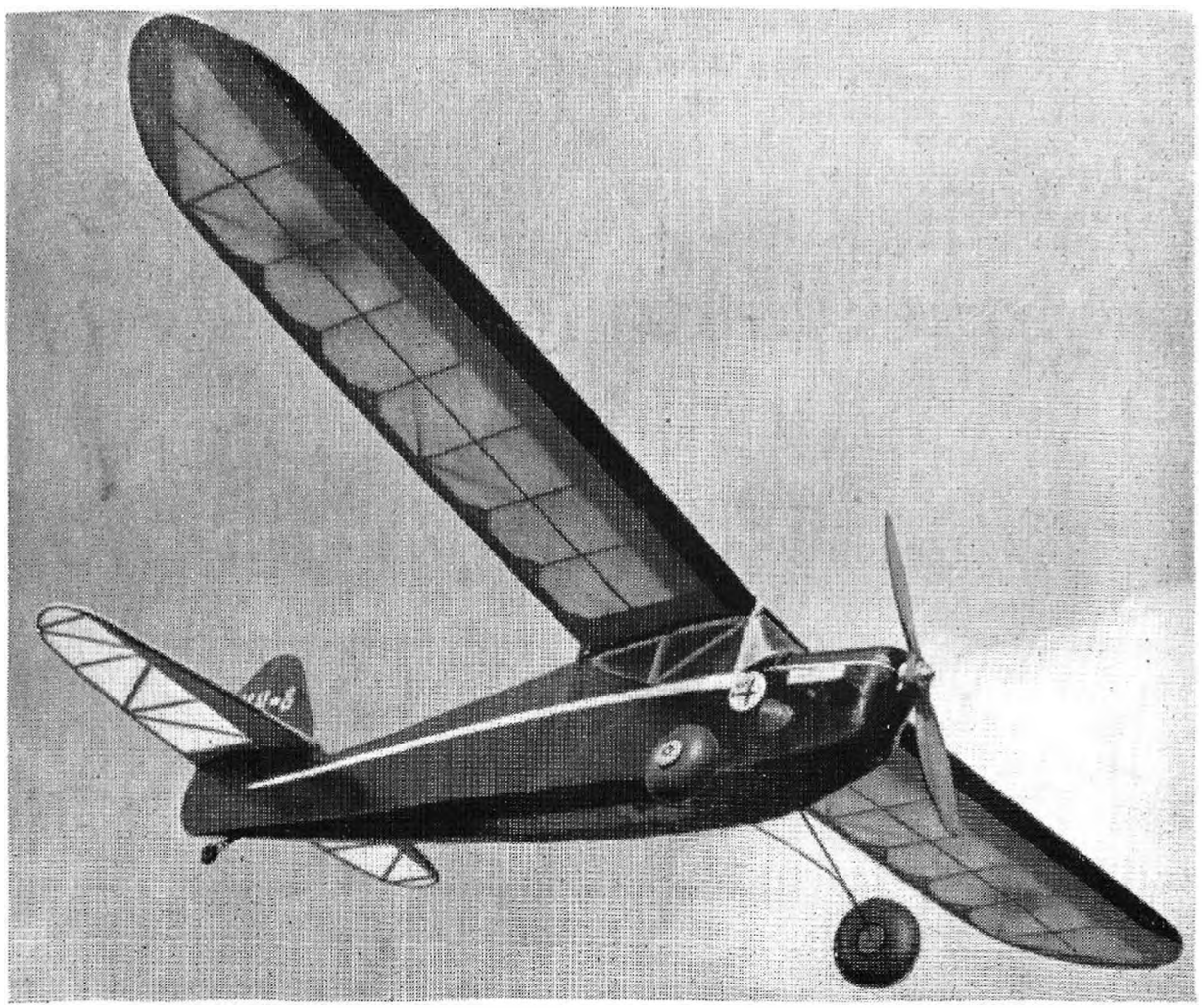

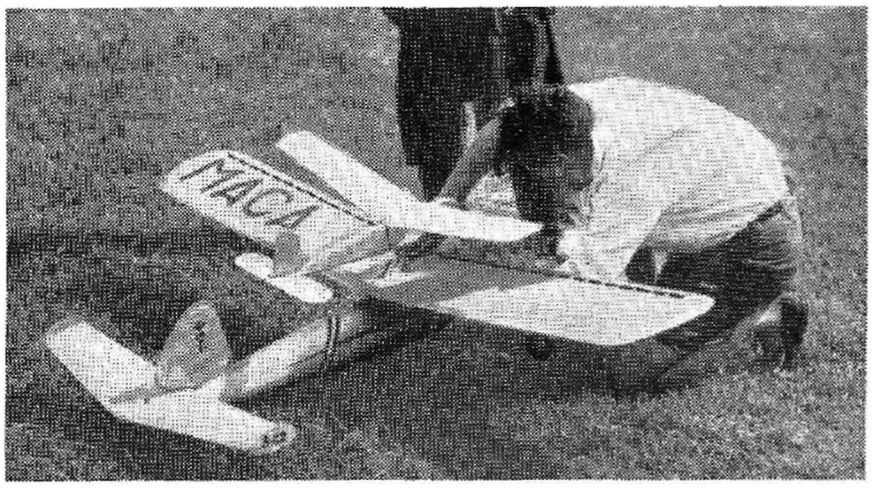

Foremost French modeller — E. Fillon, winner of this year's Aeromodeller Trophy at the 3rd Eaton Bray International Meeting trimming his pick-a-back power model. Fillon has put up consistent performances every year at Eaton Bray and proved a popular and deserving champion.

OTHER EVENTS.

June 20th.—NORTHERN HEIGHTS RALLY.
Rubber Formula Event.

Queen's Cup.

1.	P. L. Smith	Bournemouth	567.25
2.	L. A. C. Ryde	Northern Heights	436.5
3.	P. T. Capon	S.M.A.E. C.M.	420.6
4.	J. B. Cox	Northern Heights	389
5.	E. A. Davies	North Kent	325.6
6.	F. E. Dewell	Middlesbrough	320.3

July 31st.—August 8th.—EATON BRAY THIRD INTERNATIONAL WEEK.

Sailplane Contest.

			Aggregate
1.	R. Minney	Great Britain	2093.5 sec.
2.	M. Cheurlot	France	1807.3 ,,
3.	D. F. Pepperell	Great Britain	1241.6 ,,

Power Ratio.

			Ratio
1.	Schaffner	France	16.83 sec.
2.	Bernard	,,	9.3 ,,
3.	Muller	,,	8.09 ,,

Precision Power.

			Points	error
1.	Fillon	France	7	sec.
2.	Jossien	,,	13.5	,,
3.	v. d. Linden	Holland	14	,,

EXPERIMENTAL CONTEST.

A. Jet, Rocket and other unorthodox power units.

				Trophy pts.
1.	R. Minney	G.B.	31 pts.	10

B. Acrobatics, glider towing, etc.

1.	J. Morrisset	France	65 ,,	10
2.	Fillon	France	62 ,,	7
3.	R. Minney	G.B.	37 ,,	5

C. Tailless, Tandem Canard and Ornithopters.

1.	A. Lamot	Belgium	82 pts.	10
2.	W. Poile	G.B.	81 ,,	7
3.	W. Luxemborg	Holland	80 ,,	5

D. Control Line Models.

Class 3.

1.	C. Houghton	G.B.	91 m.p.h.	10
2.	Labarde	France	85 ,,	7

Class 4.

1.	Laniot	France	102 ,,	10
2.	Fillon	France	81 ,,	7

Wakefield Contest.

						Trophy pts.
1.	E. Smith	G.B.	127	110	237	20
2.	Robyn	Belgium	93	73	166	17
3.	Van Schenk	Holland	114.25	40	154.25	15

F.A.I. Rubber.

1.	Van Schenk	Holland	185	65	250	20
2.	R. Macpherson	G.B.	98	68.2	166.2	17
3.	Tournadre	France	72	72.75	144.75	15

AEROMODELLER TROPHY RESULTS.

	Sailplane.	Power Duration.	Power Precision	Unorthodox.	Aerobatics.	Tailless, Tandem Canard.	C/L Speed Cl. III.	C/L Speed Cl. IV.	Wakefield Rubber	F.A.I. Rubber.	Total
1. Fillon France	10	4	20	...	7	...	...	7	4	11	63
2. Minney, G.B.	20	...	...	10	5	...	...	...	13	4	52
3. Muller, France	...	15	14	...	4	...	...	...	10	8	51
4. Tournadre France	7	12	...	...	...	..	...	...	14	15	48
5. Luchetta, Sw'land.	14	14	10	...	...	...	...	...	...	...	38
6. Joissen, France	3	...	17	...	...	...	...	...	11	7	38
7. Van Schenk Holland	...	...	...	...	...	...	...	...	15	20	35
8. Houghton, G.B.	...	8.5	11.5	...	...	...	10	...	...	...	30
9. Robyn, Belgium	...	11	...	...	...	...	...	...	17	...	28
10. Poile, G.B.	...	8.5	11.5	...	...	7	...	...	...	...	27
Labarde, France	...	...	7	...	...	...	7	...	...	13	27

September 6th-10th.—ISLE OF MAN RALLY.

Free Flight Power.—

A. H. Wilson	Hayes	264.7
D. Exley	Barnsley	173.9
W. Poile	C/Member	173.2

Rubber Durations.—

J. D. Marshall	Hayes	114.9
S. Goodfellow	Blackpool	111
A. H. Wilson	Hayes	70.3

Gliders.—

J. D. Marshall	Hayes	166.1
R. Goodfellow	Blackpool	147.9
A. H. Wilson	Hayes	111

Tailless.—

J. D. Marshall	Hayes	168
A. H. Wilson	Hayes	162
W. Poile	C/Member	78

Jet (Jetex).—

R. Goodfellow	Blackpool	102.9
J. B. Wood	Croydon	76.2
T. Combert	Liverpool	74.5

Control Line (Speed).—

J. B. Wood	Croydon	62.2 m.p.h.
K. G. Wright	Blackpool	56.2 ,,
S. F. Walker	Blackpool	52 ,,

C/L Aerobatic.—

S. F. Walker	Blackpool	118 pts.
D. Teare	Manx	85 ,,
T. Sheard	Manx	83 ,,

ANGLO-DUTCH MEETING.

An annual friendly contest for sailplanes between Dutch and British teams, held in alternate years in England and Holland. The 1948 contest took place at Arnhem.

Holland		*Great Britain*	
Koorn	108	Yeabsley	310.8
Luxemborg	397.4	Wilson	230.2
Vriend	402	Teasell	259
Torkens	240	Gosling	115
	1147.4		915

WAKEFIELD WINNERS.

1928	T. H. Newell	Gt. Britain
1929	R. N. Bullock	,,
1930	J. H. Ehrardt	U.S.A.
1931	J. H. Ehrardt	,,
1932	*Void (G. Light disqualified)*	
1933	J. W. Kenworthy	Gt. Britain
1934	J. B. Allman	,,
1935	G. Light	U.S.A.
1936	A. A. Judge	Gt. Britain
1937	E. Fillon	France
1938	J. Cahill	U.S.A.
1939	R. Korda	,,
(1940-1947 *No contests due to war and post-war problems.*)		
1948	R. Chesterton	Gt. Britain

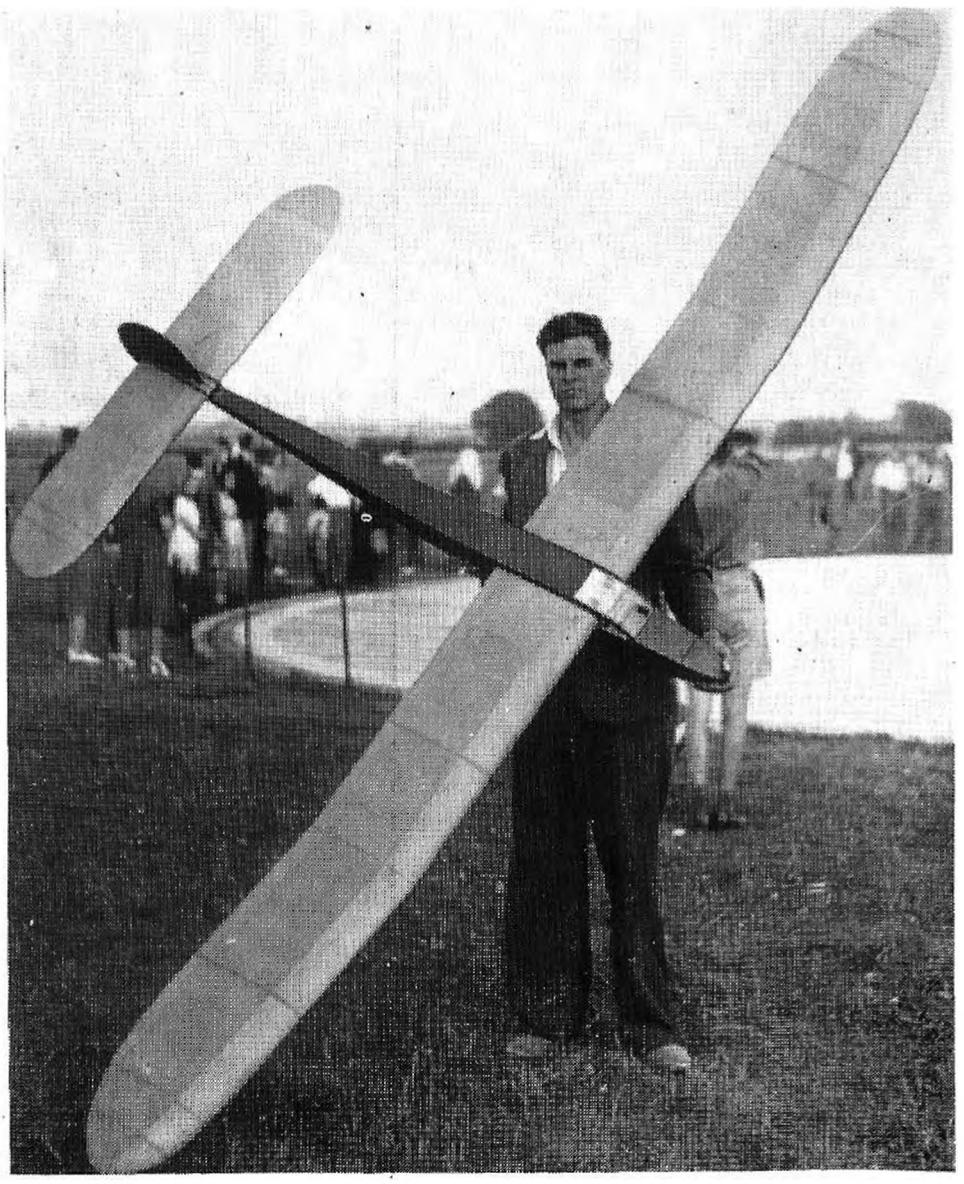

Minney of Luton with his outsize in sailplanes "Thermalist I" —which proved good enough to beat continental opposition at Eaton Bray this year. There is an increasing trend towards bigger and better sailplanes in this country, without necessarily aping continental all hardwood construction.

OFFICIAL RESULTS

WAKEFIELD INTERNATIONAL COMPETITION

AKRON, OHIO, U.S.A.—AUGUST 27, 1948

Contestant and Country (Proxy)	First Flight m. s.	Second Flight m. s.	Third Flight m. s.	Average m. s.
1. Chesterton, England ...	4 46.5	6 2.4	8 32.9	6 27.3
2. Marsh, New Zealand (Curth)	2 58.2	12 11.1	2 28.3	5 52.5
3. Holland, U.S.A. ...	2 3.2	6 34.3	4 51.5	4 29.7
4. Coryell, U.S.A. ...	3 28.0	7 37.2	1 42.8	4 16.0
5. Milligan, Canada ...	1 12.3	8 48.4	1 16.6	3 45.8
6. Copland, England ...	4 9.3	3 8.3	2 31.9	3 16.5
7. Cahill, U.S.A.	1 48.5	7 44.2	—	3 10.9
8. Lippens, Belgium ...	1 57.1	5 22.1	1 45.8	3 1.7
9. Van Hemelrijck, Belgium	1 3.4	7 0.9	0 13.4	2 45.9
10. Bunton, U.S.A. ...	1 24.9	1 33.0	5 14.2	2 44.0
11. Pregaldien, Belgium ...	3 21.7	1 41.9	2 32.3	2 32.0
12. Joostens, Belgium ... (Goldberg)	2 36.2	2 33.6	1 15.8	2 8.5
13. Korda, U.S.A.	1 43.6	3 4.0	1 32.7	2 6.8
14. Frost, Australia ... (Cummings)	3 26.2	0 58.4	1 47.3	2 4.0
15. MacDonald, New Zealand (Broderick)	2 47.9	1 43.8	1 20.7	1 57.5
16. Walter, Canada ...	2 57.4	1 28.6	1 22.8	1 56.3
17. Woodley, New Zealand (Fritz)	2 5.6	2 5.6	1 20.1	1 50.4
18. Piggott, England ...	0 10.3	2 0.7	3 16.7	1 49.2
19. Stott, England	1 30.6	1 17.2	2 33.0	1 46.39
20. Doughty, England ...	1 54.9	1 16.9	1 29.8	1 33.9
21. King, England ...	0 43.2	0 43.6	3 12.4	1 33.0
22. Cotte, Canada	1 16.5	1 35.0	1 33.7	1 28.4
23. Harold, New Zealand (Ritzenthaler)	1 16.3	0 55.3	1 58.9	1 23.5
24. Nelder, Canada ...	1 16.0	1 22.6	1 27.3	1 22.0
25. Wood, Canada	1 21.8	0 53.6	1 32.8	1 16.1
26. Schumacher, U.S.A. ...	1 53.9	1 37.1	0 9.7	1 13.6
27. Grey, New Zealand ... (Fromm)	1 13.6	1 21.6	0 17.3	0 57.5
28. Dickie, Canada ...	0 58.1	0 55.2	0 11.8	0 41.7
29. Marden, Australia ... (Donahue)	0 14.0	0 9.8	0 43.9	0 22.4
30. Sijsmans, Belgium ...	2 delayed flights	..	..	..
31. Court, New Zealand (Lidgard)	1 delayed flight	..	..	..

BRITISH NATIONAL MODEL AIRCRAFT RECORDS.

as at 30th September, 1948.

OUTDOOR.

Rubber driven—

Monoplane	J. Wingate	31 : 32.2
Biplane	K. Young	31 : 05
Wakefield	R. Copland	27 : 56
Canard	D. Paveley	1 : 37.1
Scale	N. G. Marcus	5 : 21.75
Tailless	H. Boys	1 : 24.5
Helicopter	R. H. Warring	: 21.4
Rotorplane	S. R. Crow	: 39.5
Floatplane	R. T. Parham	8 : 55.4
Flying Boat	M. Rainer	1 : 09

Sailplane—

Tow launch	F. Best	63 : 46
Hand launch	G. D. Peckett	6 : 57.5
Tailless (H.L.)	B. J. Twomey	1 : 15.3
Tailless (T.L.)	L. C. Harris	10 : 30

Power driven—

Class A	K. L. Stothers	6 : 10.8
Class B	—	
Class C	A. T. Frazer	*16.25
Tailless	J. Marshall	1 : 23.8
Scale	P. L. Petch	: 36
Floatplane	R. A. C. Bellinger	1 : 08
Flying Boat	N. Gregory	2 : 08.5

Control Line—

Class I	D. Butler	51.7 m.p.h.
Class II	J. D. Taplin	89.95 ,,
Class III	C. L. Houghton	91.00 ,,
Class IV	—	

INDOOR.

Free Flight—

Stick (H.L.)	R. Copland	18.52
Stick (R.O.G.)	R. Mackenzie	8 : 42
Fuselage (H.L.)	—	
Fuselage (R.O.G.)	D. Gilbert	4.33
Tailless (H.L.)	—	
Tailless (R.O.G.)	—	
Helicopter	R. Mackenzie	1 : 33
Rotorplane	L. Mawby	: 32.2

Round the Pole—

Class A	R. Rock	5 : 54.4
Class B	R. T. Parham	4 : 26
Speed	F. F. Heaton	34.04 m.p.h.

* *Made under old rules. First claim accepted under new 30 second maximum engine run will supersede this record.*

INTERNATIONAL MODEL AIRCRAFT RECORDS.

Issued by F.A.I., February, 1948.

Rubber Driven—

Duration	V. Pavlioutchenko (Russia 11.8.47)	52 : 15
Distance	B. V. Haisman (G. Brit. 16.7.47)	29.4 km.
Speed	V. Davidov (Russia 11.7.40)	107.08 km./h.

Sailplane—

Duration	Traugott Haslach (Swtz'land 4.6.44)	2 : 21 : 6
Distance	H. Varache (France 21.7.46)	98.72 km.
Height	G. Bougeret (France 8.7.45)	1309.6 m.

Power Driven—

Duration	G. Liouboutchkine (Russia 12.7.47)	3 : 48 ; 41
Distance	S. Malik (Russia 19.9.47)	210.62 km.
Height	G. Liouboutchkine (Russia 11.8.46)	3,017 m.
Speed	Pland & Gladieux (France 2.10.45)	48.856 km./h.

Hydroplanes—

Rubber Driven—

Duration	N. Trounchenkov (Russia 15.8.47)	5 : 55.8
Distance	P. Pavlov (Russia 8.8.47)	1,117 km.
Speed	B. Abramov (Russia 6.8.40)	76.896 km./h,

Hydroplanes—

Power Driven—

Duration	L. Tchelmintsev (Russia 9.8.40)	1 : 4 ; 42
Distance	N. Kozlovski (Russia 9.11.38)	25.542 km.
Height	I. Kavsadze (Russia 8.8.40)	4,110 m.

World Records of all Categories—

Duration	G. Liouboutchkine (Russia 2.7.47)	3 : 48 ; 41
Distance	S. Malik (Russia 19.9.47)	210.62 km.
Height	G. Liouboutchkine (Russia 11.8.46)	3,017 m.
Speed	V. Davidov (Russia 11.7.40)	107.08 km./h.

(NOTE.—Whilst above are latest official F.A.I. records we have received undermentioned National Records from Hungary, which, if homolgated under F.A.I., would appear to supersede those above :—

Rubber Driven—

Duration	G. Meszetler (Hungary 31.8.48)	1 : 01 ; 22
Distance	G. Benedek (Hungary 20.8.48)	50.26 km.

NATIONAL MODEL AIRCRAFT GOVERNING BODIES

In most instances the full-size national aero club is directly responsible for the conduct of model aeronautics, but in some cases, as for example the S.M.A.E., a specialist group has been delegated to handle affairs on behalf of the parent body.

GREAT BRITAIN	The Society of Model Aeronautical Engineers, Londonderry House, Park Lane, London, W.1.
ARGENTINE	Aero Club Argentino (Seccion Aeromodelismo), Rodriguez Piera 240, Buenos Aires.
BELGIUM	Federation de la Petite Aviation Belge, 1, Rue Montoyer, Brussels.
BRAZIL	Aero-Clube do Brasil, 31 rua Alvaro Alvim, Rio de Janeiro
CANADA	Royal Canadian Flying Clubs Association (Model Aircraft), 309, Journal Buildings, Ottawa.
CHILE	Club Aereo de Chile, Santa Lucia 256, Santiago.
CUBA	Club de Aviacion de Cuba, Edificio Larrea, Havana.
CZECHOSLOVAKIA	Aeroklub Republiky Ceskoslovenske, Smecky 22, Prague II.
DENMARK	Det Kongelige Danske Aeronautiske Selskab, Norre Farimagsgade 3K, Copenhagen.
EGYPT	Royal Aero d'Egypt, 26, rue Sherif Pacha, Cairo.
FINLAND	Suomen Ilmailulitto Flygforbund R.Y., Mannerheimintie 16, Helsinki.
FRANCE	Federation Nationale Aeronautique (Modeles Reduits), 7, Avenue Raymond Poincare, Paris XVI.
HOLLAND	Koninklijke Nederlandsche Vereeniging voor Luchvaart, Anna Paulownaplein 3, The Hague.
HUNGARY	Magyar Repulo Szovetseg, Sztalin-ter, 14sz, Budapest V.
ICELAND	Flugmalafelag Islands, P.O. Box 234, Reykjavik.
IRELAND	Model Aeronautics Council of Ireland, Abbey Buildings, Middle Abbey Street, Dublin.
ITALY	Aero Club D'Italia, Via Cesare Beccaria 35, Rome.
JUGOSLAVIA	Aero-Club Kraljevine Jugoslavije, Uzun, Mirkova IV/I, Belgrade.
LUXEMBOURG	Aero Club du Grande-Duche de Luxembourg, 5, Avenue Monteray, Luxembourg.
MONACO	Monaco Air-Club, 29, Boulevard des Moulins, Monte Carlo.
NORWAY	Norske Aero Club, Ovre Slottsgate 20, Oslo.
PERU	Aero Club del Peru, Lima.
POLAND	Aeroklub Rzeczypospolitej Polskiej, Ul. Nowogrodza 49, Warsaw.
PORTUGAL	Aero Club de Portugal, Avenida da Liberdade 226, Lisbon.
RUMANIA	Aeroclubul Republico al Romaniei, Lascar Catargi 54, Bucharest.
SOUTH AFRICA	The South African Model Aeronautic Association, 302, Grand National Buildings, Rissik Street, Johannesburg.
SPAIN	Federacian Aeronautica de Espana, Calle Mayor 4, Madrid.
SWEDEN	Kungl. Svendka Aeroklubben, Malmskillnadsgatan 27, Stockholm.
SWITZERLAND	Aero Club de Suisse (Modeles Reduits), Hirschengraben 22, Zurich.
SYRIA AND LEBANON	Aero Club de Syrie et du Libon, Beyrouth.
TURKEY	Turk Hava Kurumu, Enstitu Caddesi 1, Ankara.
UNITED STATES OF AMERICA	Academy of Model Aeronautics, 1025, Connecticut Avenue, Washington 6, D.C.
U.S.S.R.	Aero Club Central de l'U.R.S.S., Chkalov, Moscou-Touchino, Moscow.
URUGUAY	Aero Club del Uruguay, Paysandu 896, Montevideo.

JIGE 213 RADIO CONTROLLED POWERED GLIDER

DESIGNED BY JEAN GUILLEMARD, PARIS.
CONSTRUCTED BY HENRI VARACHE.
RADIO CONTROL INSTALLATION BY C. PEPIN.

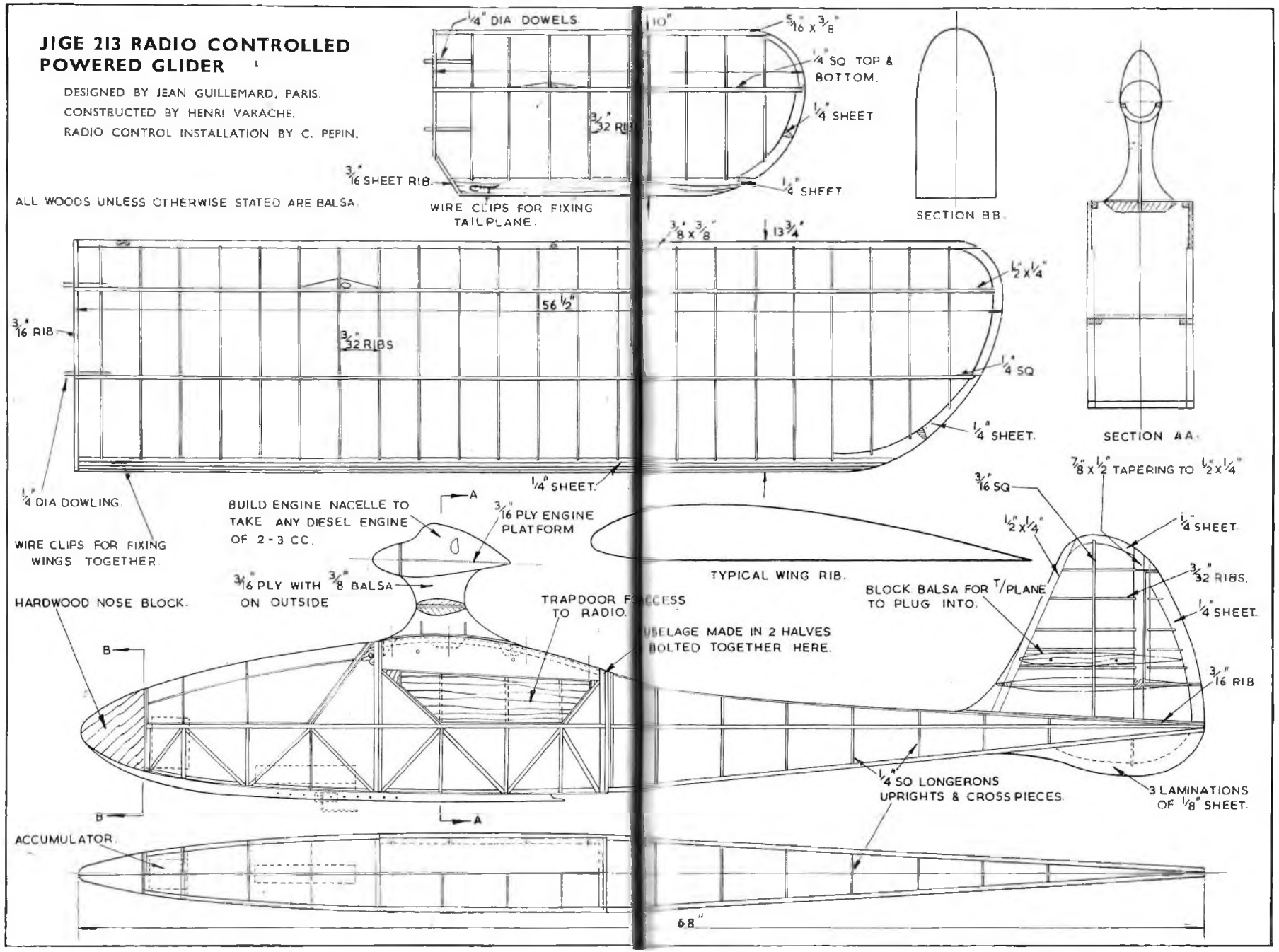

Loubine. Glider design by A. E. Primard, Monaco.

DESCRIPTION.—This elegant small design has enjoyed wide popularity on the Mediterranean coast, and should commend itself to British builders who require high performance coupled with moderate size and simple construction and yet want the finished model to " look good." Features are deep narrow fuselage, with the top and bottom members doubled or sheet covered for strength, Warren girder construction, shoulder wing and high tailplane, mounted above the fin. Wing peg is made of several pieces of thin sheet giving flexibility—a method first popularised in this country by Howard Boys—and can be replaced easily if necessary. A small fixed tongue locates the wing securely in place. Specially worthy of note is the neat tailplane fixing, where a large headed dowel is slipped over an enlarged hole and then slid back in a slot to lock it. Any landing shock releases the tail without damage. Loubine is a model that repays care in construction, as with average luck it should endure for a full season—losses O.O.s. excepted.

DIMENSIONS.—Span $51\frac{3}{4}$ins. Overall length, 33ins. Maximum width, $1\frac{1}{4}$ins. Chord, $5\frac{7}{8}$ins. Tailplane $17\frac{1}{4}$ ins. Chord, $4\frac{11}{16}$ ins.

Well-known expert from the Air Club of Monaco, M. Aubertin demonstrates the model to interested staff at Eaton Bray.

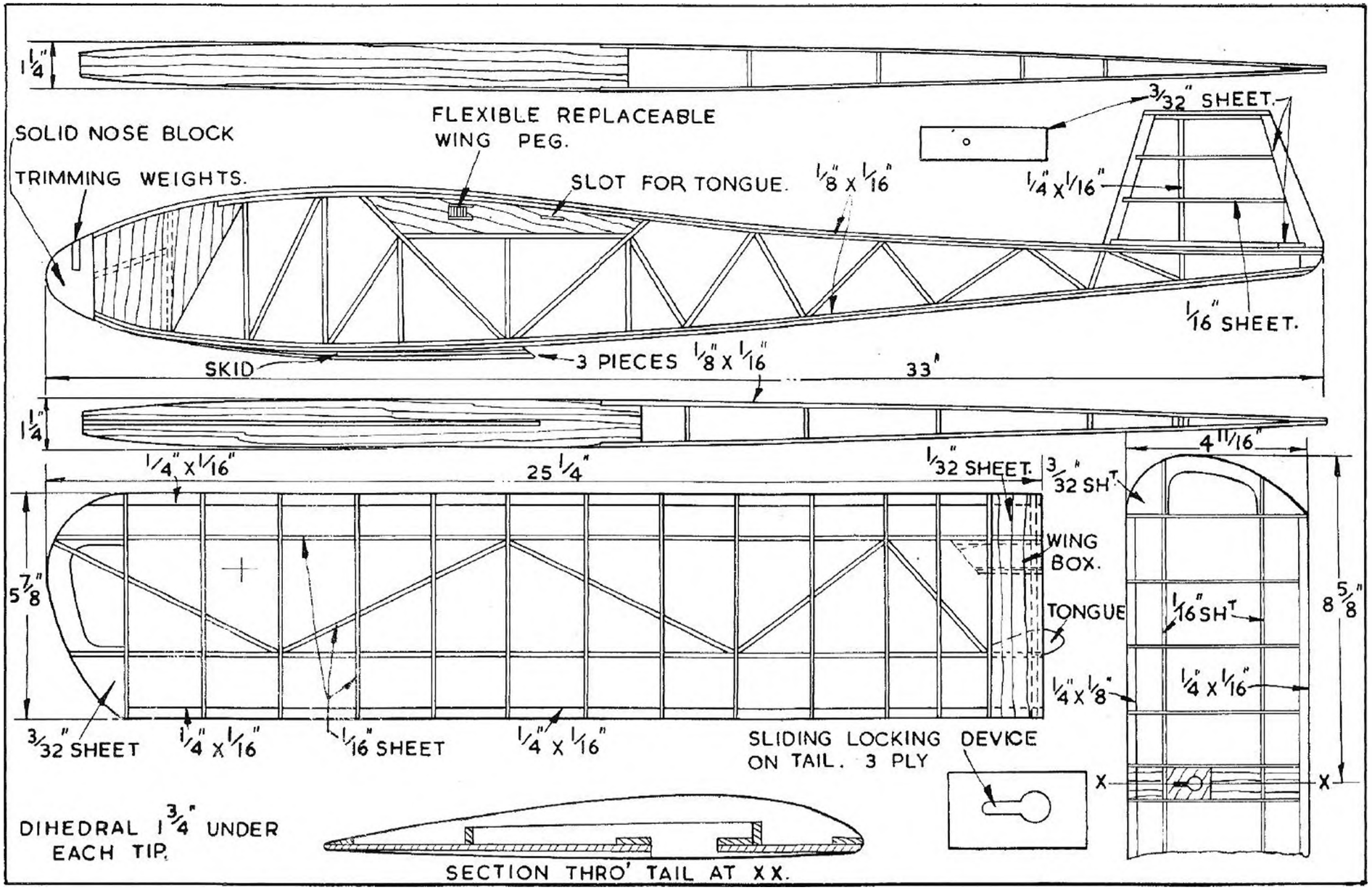
1 1/4"
SOLID NOSE BLOCK
TRIMMING WEIGHTS.
FLEXIBLE REPLACEABLE WING PEG.
SLOT FOR TONGUE.
1/8" x 1/16"
3/32" SHEET.
1/4" x 1/16"
1/16" SHEET.
SKID
3 PIECES 1/8" x 1/16"
33"
1 1/4"
1/4" x 1/16"
25 1/4"
1/32" SHEET.
3/32" SHT
4 11/16"
WING BOX.
TONGUE
5 7/8"
8 5/8"
1/16" SHT
1/4" x 1/8"
1/4" x 1/16"
3/32" SHEET
1/4" x 1/16"
1/16" SHEET
1/4" x 1/16"
SLIDING LOCKING DEVICE ON TAIL. 3 PLY
X
X
DIHEDRAL 1 3/4" UNDER EACH TIP.
SECTION THRO' TAIL AT XX.

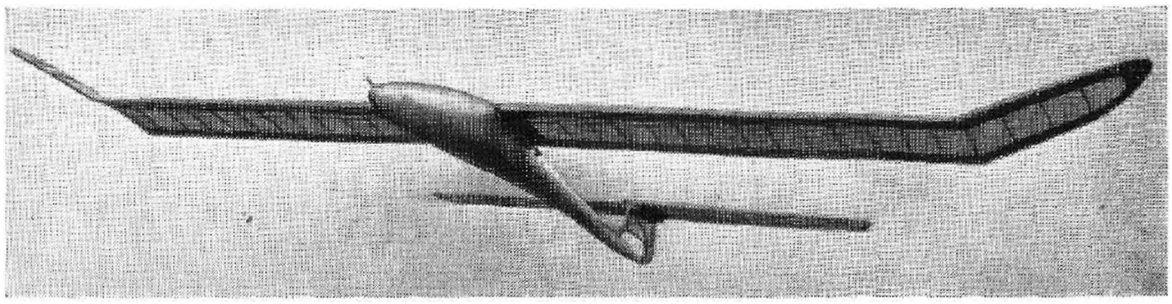

Russian Sailplane. Designed by G. Ventena.

DESCRIPTION.—So very little has come out of Russia, except news of latest records claimed, that readers may be interested in what can be described as a typical advanced sailplane type. The plan shown of Ventena's model is No. 10 in a progressive series of a dozen published for Russian Youth Groups. Notable feature is the fuselage, carved in the best "solid" tradition from two planks of sugar pine or spruce—no inconsiderable labour when it is realised that overall dimensions of the original block are 44 × 4½ × 2ins.! Two similar fuselages seen recently would have delighted the connoisseur, being professionally bleached to avoid uneven colour and highly polished in the natural wood. Another of less knotfree nature had knots skilfully removed and new wood inserted. Contrary to belief, such fuselages compare quite favourably in weight with those of conventional hardwood and stringer construction. Also notable in the design is the ratchet type tail incidence adjustment, controlled by a small wingnut protruding from the underfin. No "iron curtain" aerofoil is used in this case for the designer has fallen back on that old favourite Eiffel 430. It should be noted that the model illustrated is NOT that in the plan, being a similar model built by Hagelstam of Finland; in the same way, the partly built fuselage is intended to illustrate method and not the actual fuselage shown in the plan.

DIMENSIONS.—Span, 67ins. Maximum chord, 5¾ins. Overall length, 45¼ins. Tailplane, 12½ins. span, maximum chord, 3¼ins. Symmetrical section.

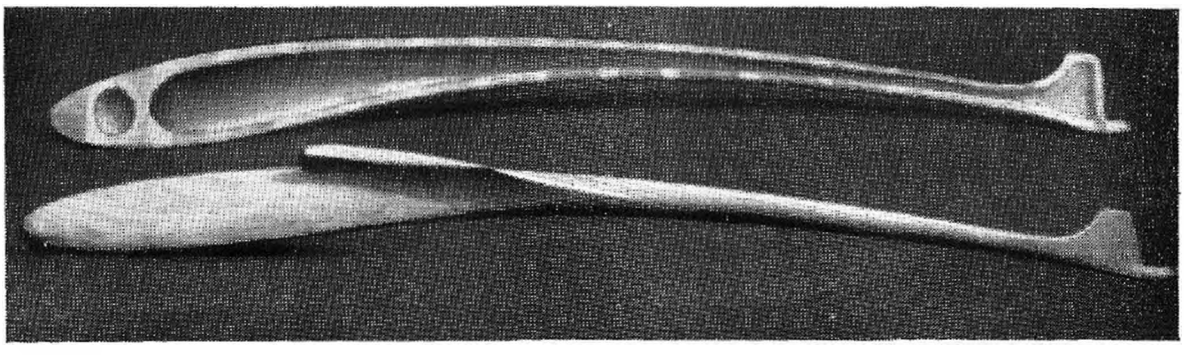

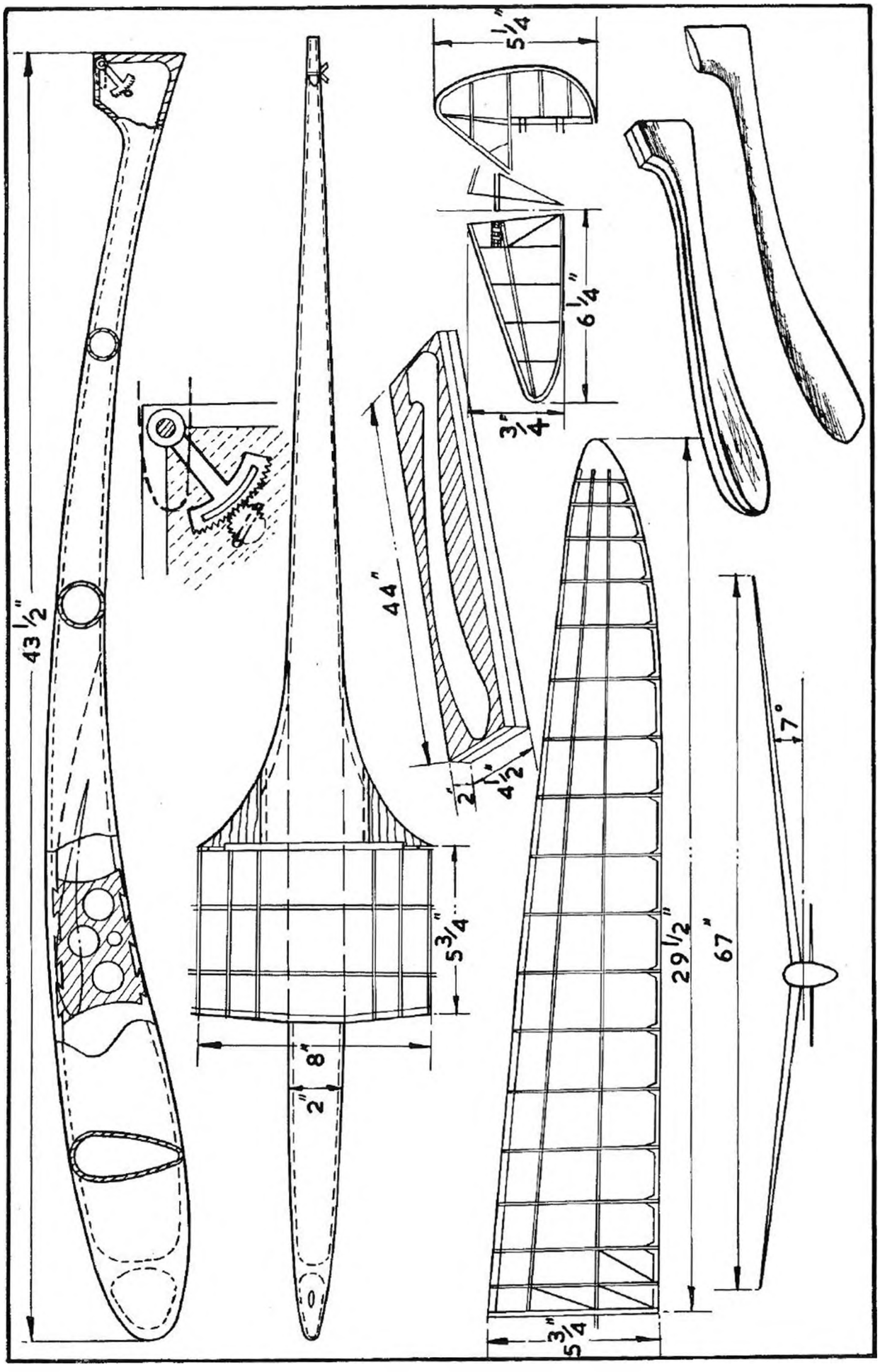
43 1/2"
5 1/4"
6 1/4"
3 1/4"
44"
2"
4 1/2"
5 3/4"
8"
2"
29 1/2"
67"
7°
5 3/4"

Super Antares. Czechoslovak Pylon Power Model by Jaroslav Broz.

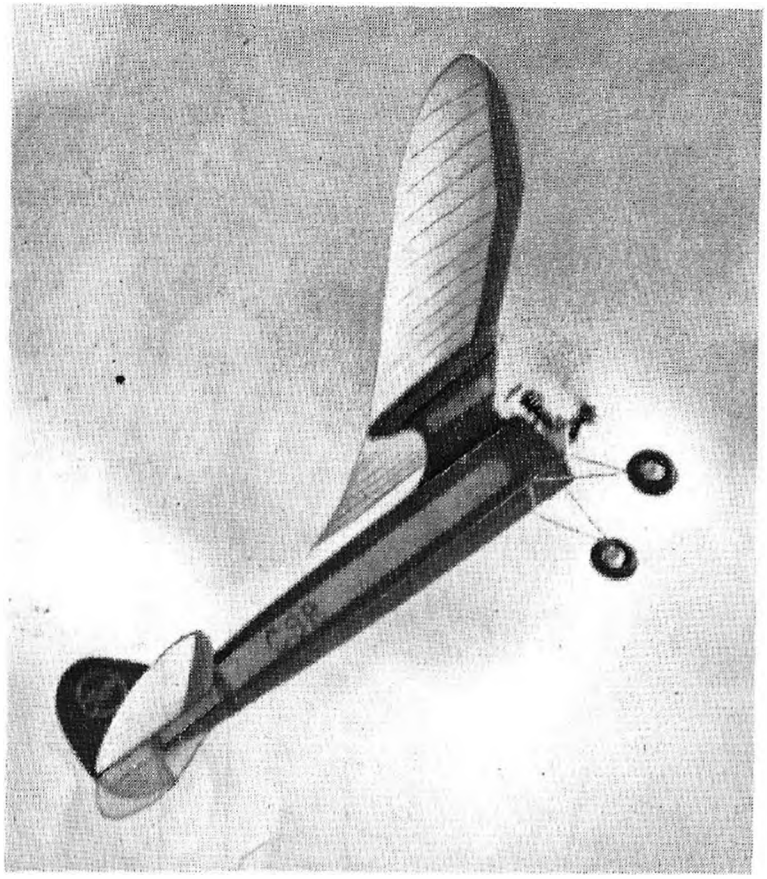

DESCRIPTION. — The Antares models were first introduced to the British public by the Czech team attending Eaton Bray First International Week in 1946. Two versions were flown, the Antares which has a box fuselage with turtle back and rounded bottom, and normal two wheel undercarriage, and the Super Antares which is a cleaned up version, with true elliptical fuselage and monowheel undercarriage. The winning model on this occasion was a hybrid, being Super Antares in all respects with the exception of retaining the original Antares landing gear. Fitted with an Ipro 6 petrol engine—a purely Czech motor—it proved good enough to beat the best from France and Belgium on a day when less than a quarter of the entrants were clocking more than a minute. Lack of any timing device beyond metering of fuel placed the Czech contingent at a disadvantage, as both the other models entered suffered from overcaution by their flyers, and only Horejsi's model really showed its paces. The following summer at the Swiss Power Meeting at Frauenfeld, Jindra placed 10th with a similar model averaging 10.1 on ratio. Construction is mainly of balsa with exception of fuselage formers in ply and hardwood. Motor mount design of metal alloy is interesting, giving maximum bearing surface on the front former without undue weight. Thrust line, without downthrust, runs through centreline of fuselage, and tailplane is mounted on the same line. Moderate pylon height and elliptical tip wings combine to make this a very elegant and pleasing high performance design that offers few of the trimming difficulties that may be experienced in more extreme layouts.

DIMENSIONS.—Span 58¼ins. Root chord 10ins. Overall length, 38⅛ins. Tailplane span, 24¾ins. Root chord, 8⅞ins. Power 6—10cc. petrol ; 3½—5cc. diesel or glowplug.

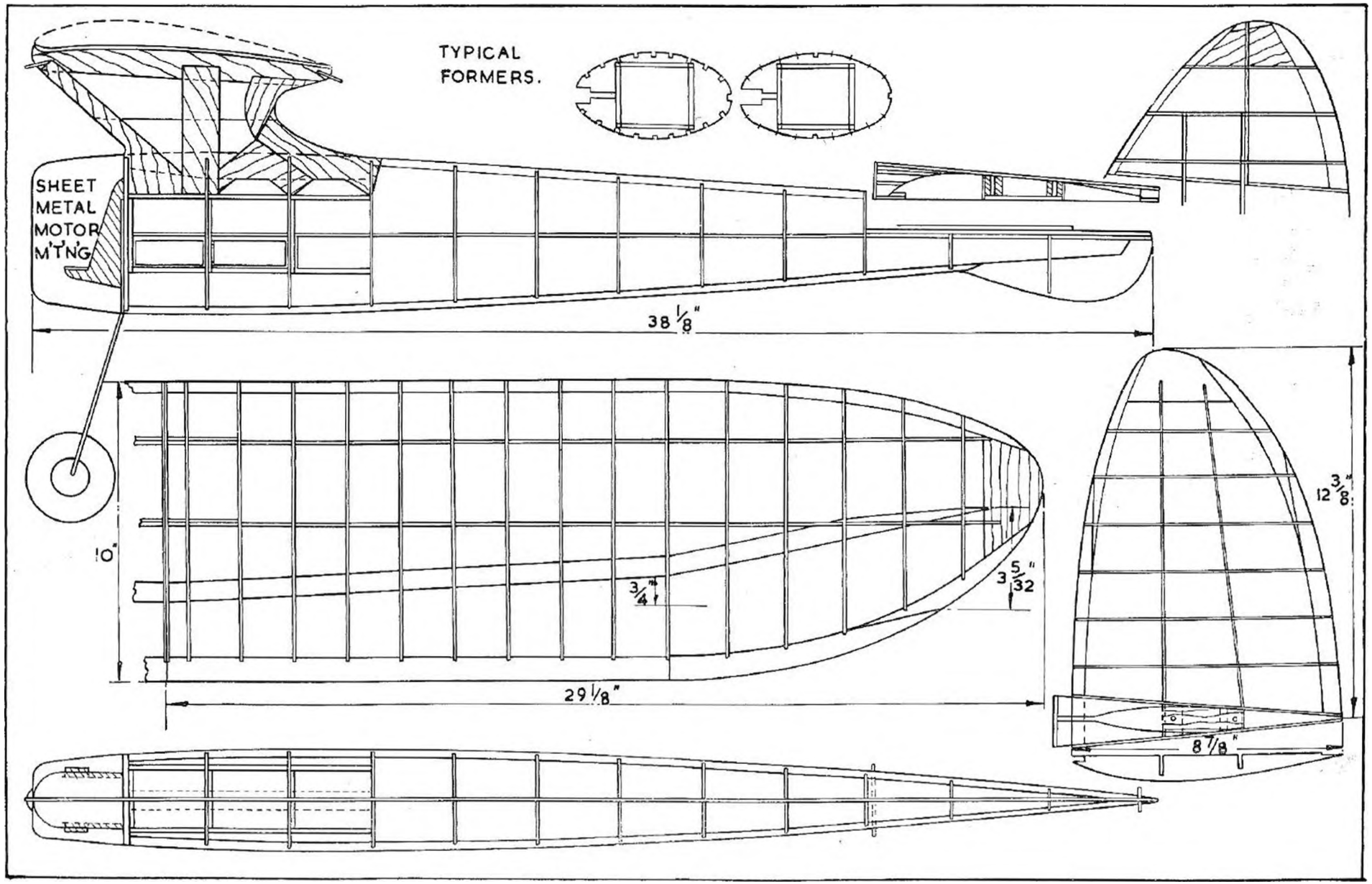
TYPICAL
FORMERS.
SHEET
METAL
MOTOR
M'T'N'G
38 1/8"
10"
3/4"
3 5/32"
29 1/8"
12 3/8"
8 1/8"

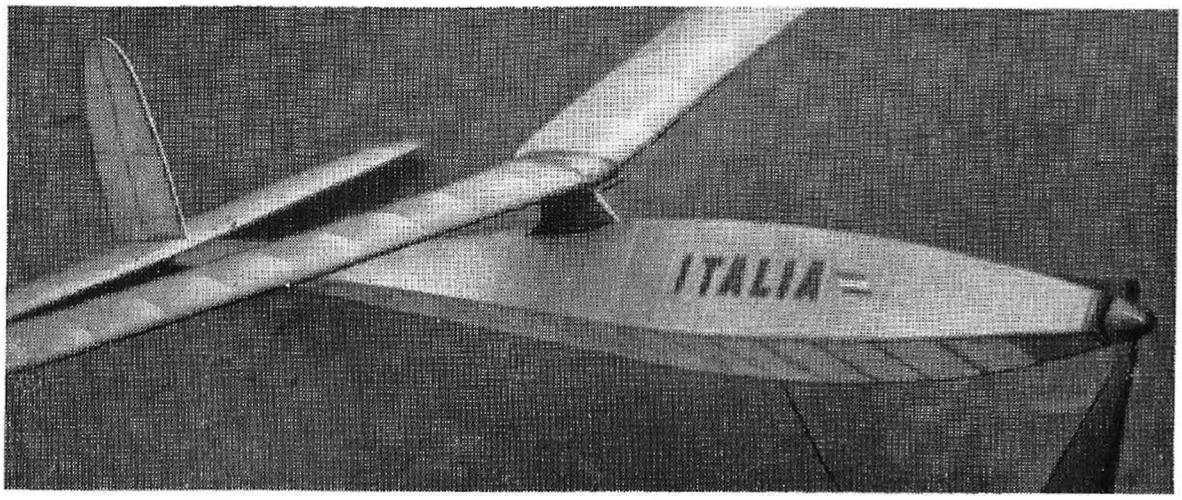

Pinnuto. Rubber Powered Model designed by Franco Conte, Italy.

DESCRIPTION.—Pinnuto strikes a new note in the somewhat stereotyped rubber field, by reason of its extremely long fuselage, and the location of the mainplane approximately amidships. This layout influenced *Aeromodeller* staff designers in producing their *Aeromodeller* Wakefield model in the Spring of 1948. Basically, it is a conventional diamond shaped fuselage, tapering aft of the mainplane, where the fuselage is strengthened by cross braces. Rubber goes from front to rear, fixing to a tail block at the extreme end. Airscrew is conventional, two bladed folding type, running in ball thrust race at $1\frac{1}{2}°$ downthrust. Pylon mounted mainplane is of Eiffel 400 section, parallel chord, with narrower centre section; normal V-type dihedral. Tailplane favours Clark Y, and again is narrower at centre fixing section. Undercarriage is fixed and features small single wheel.

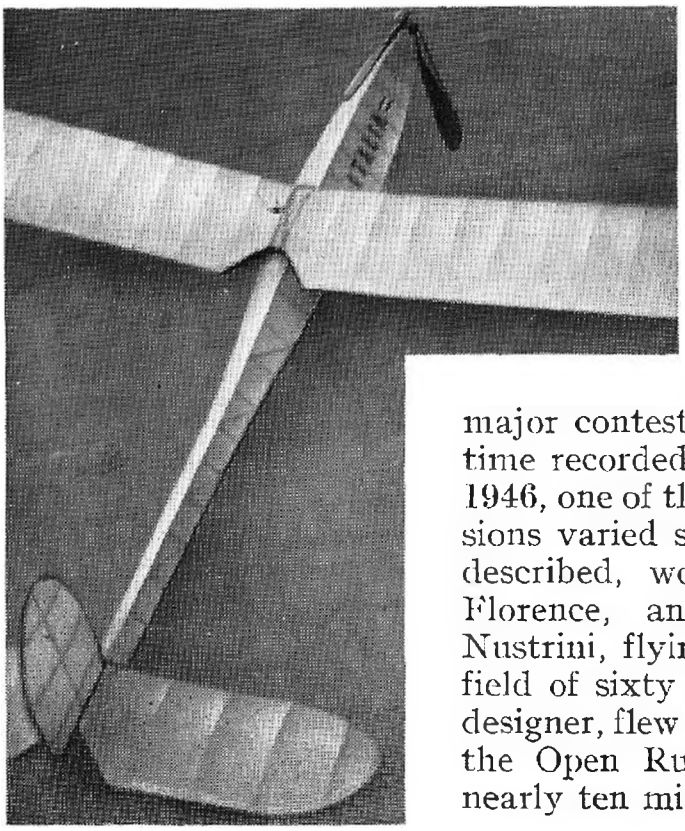

PERFORMANCE.—This model was first developed in 1945, and in all nine prototypes have been built, winning twenty-two major contests; all being lost o.o.s. Best time recorded to date is fifty minutes. In 1946, one of the earlier marks, whose dimensions varied slightly from Pinnuto V, here described, won the Italian Nationals at Florence, and was followed home by Nustrini, flying an identical machine, in a field of sixty entries. In 1947, Conte, the designer, flew Mk. V at Eaton Bray and won the Open Rubber with a single flight of nearly ten minutes o.o.s.

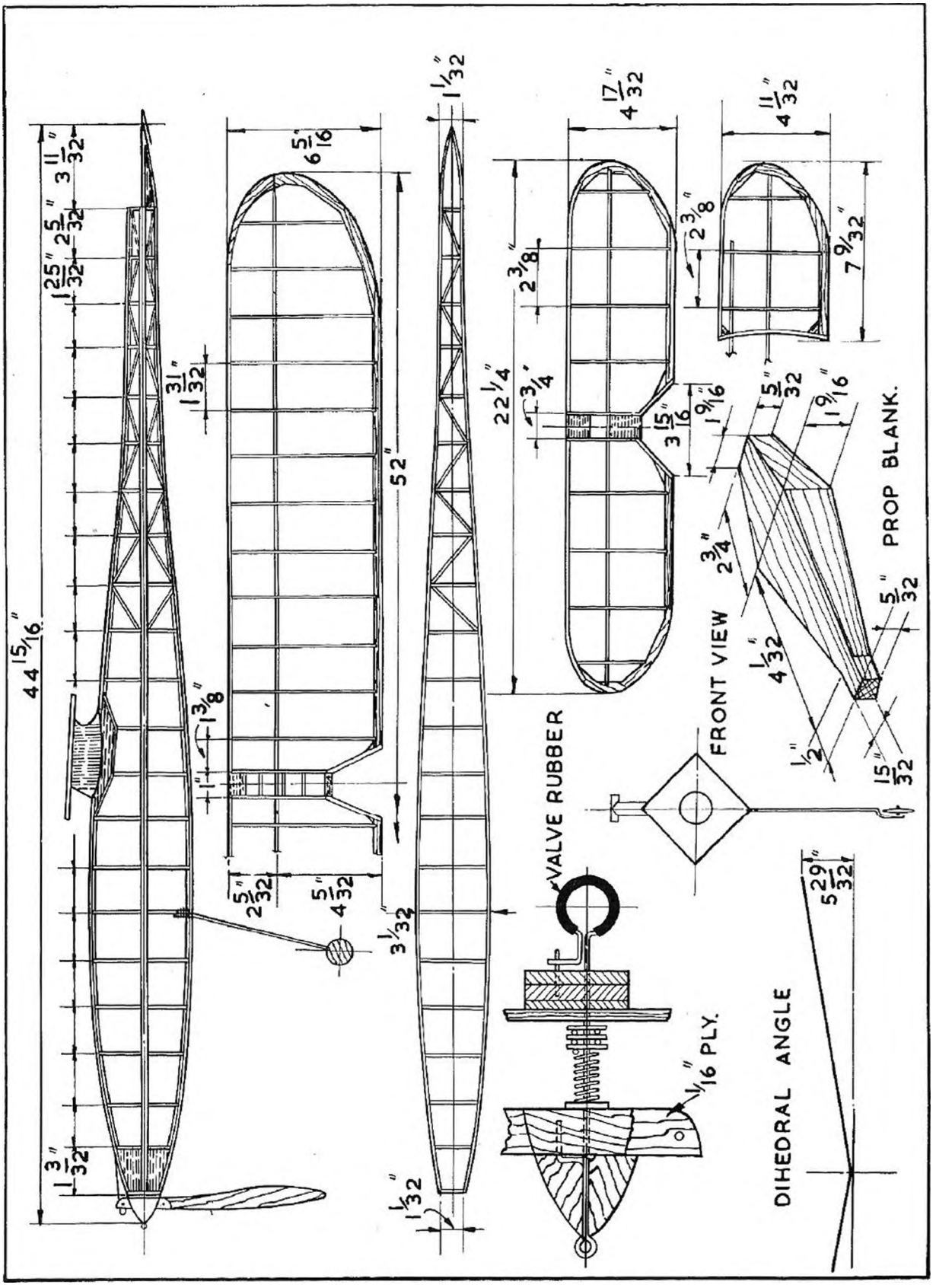

DIMENSIONS.—Span, 52ins. Overall length, $44\frac{15}{16}$ins. Mainplane chord, $6\frac{5}{16}$ins. Tailplane span, $22\frac{1}{4}$ins. Chord, $4\frac{17}{32}$ins. Airscrew, $16\frac{1}{4}$ins. diameter. Power, 40 strands $\frac{1}{8}$ or 20 strands $\frac{3}{16}$. Length of motor, 42ins.

Hale. Typical Swedish Sailplane by Sven Olle Ridder.

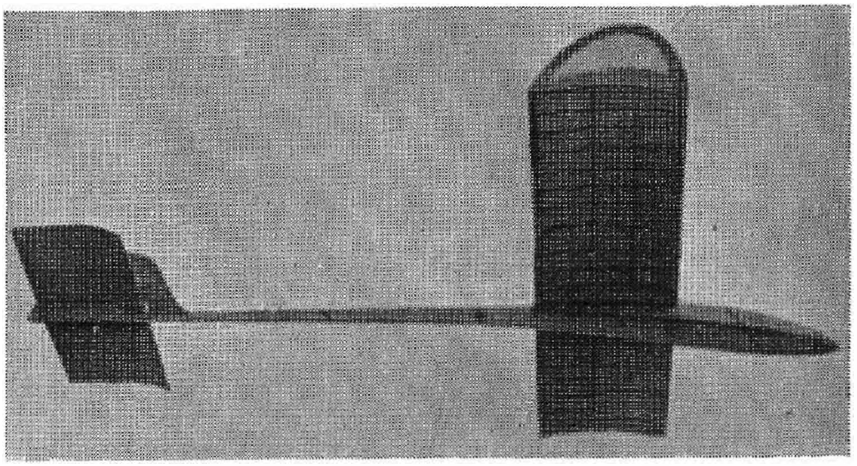

DESCRIPTION. — Swedish aeromodellers have developed a style of sailplane that is essentially their own, owing little or nothing to any outside influence. Its characteristics are parallel chord wings, with either end plates or tip dihedral; stick type of fuselage, swelling into a teardrop shape at the forward end ; and a parallel chord lifting type of tailplane. In addition to this there is the wide range of S.I. aerofoil sections which contribute so much to performance. Perhaps the best known of these Swedish designs in this country is the Sunnanvind by Sigurd Isacson, which has proved immensely popular in kit form. Sunnanvind was actually developed by the designer as an instructional model to be built in conjunction with a series of broadcast talks arranged by the Royal Swedish Aero Club. Hale, the model here described, carries the simple principles of Sunnanvind a stage further into the intermediary class, and offers a considerably improved performance at the cost of a little more complicated construction. Hardwood is used throughout with the exception of tailplane ribs and fin outline where balsa is used for lightness.

PERFORMANCE.—Lennart Sunstrom first demonstrated this model at Eaton Bray in shocking weather conditions. In spite of apparent flimsy construction—the mainplane and tailplane positively waggled on the towline—it sailed o.o.s. on every occasion in from one to two minutes, and was recovered undamaged.

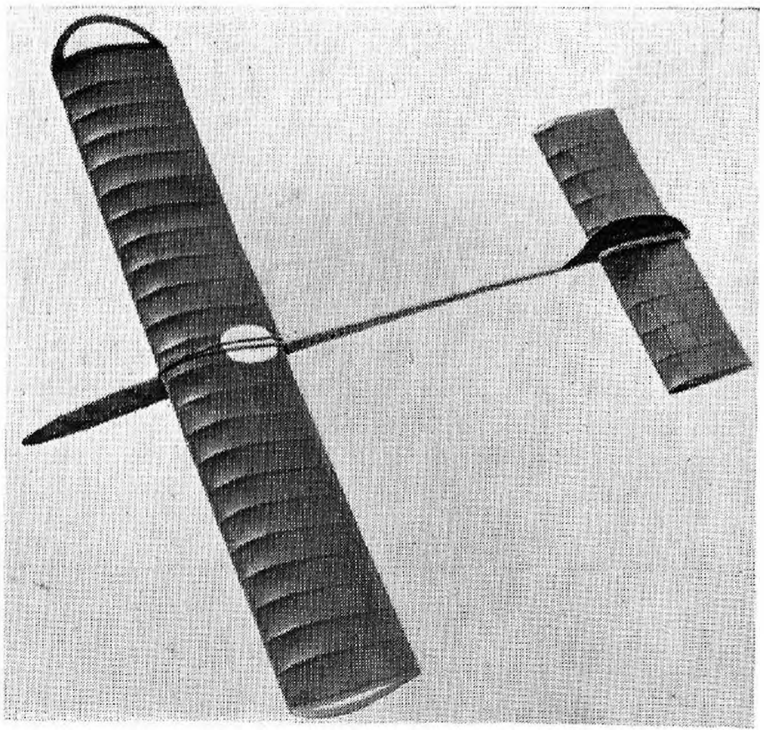

DIMENSIONS.—Span 37 ins. (can be made 36 ins. for convenience of wood sizes). Chord $5\frac{13}{16}$ ins. Overall length $33\frac{1}{2}$ ins. Tailplane $16\frac{3}{4}$ ins. Chord $4\frac{3}{8}$ ins. Weight 6 to $6\frac{3}{4}$ ozs.

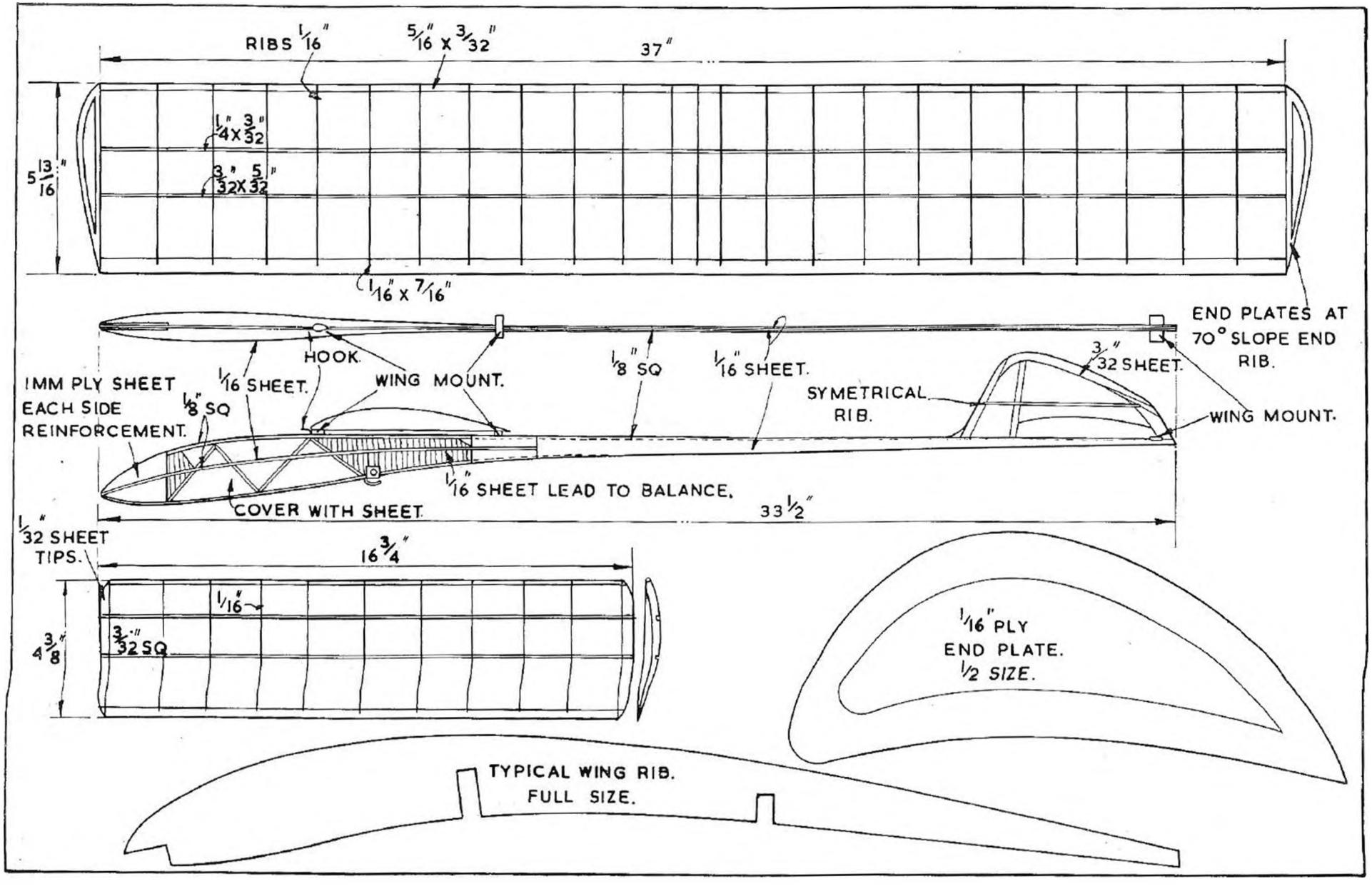
RIBS 1/16"
5/16" x 3/32"
37"
1/4" x 3/32"
3/32" x 5/32"
5 13/16"
1/16" x 7/16"
END PLATES AT 70° SLOPE END RIB.
HOOK.
WING MOUNT.
1/8" SQ
1/16" SHEET.
3/32" SHEET.
SYMETRICAL RIB.
WING MOUNT.
1MM PLY SHEET EACH SIDE REINFORCEMENT.
1/8" SQ
1/16" SHEET LEAD TO BALANCE.
COVER WITH SHEET.
33 1/2"
1/32" SHEET TIPS.
16 3/4"
1/16"
3/32" SQ
4 3/8"
1/16" PLY END PLATE. 1/2 SIZE.
TYPICAL WING RIB. FULL SIZE.

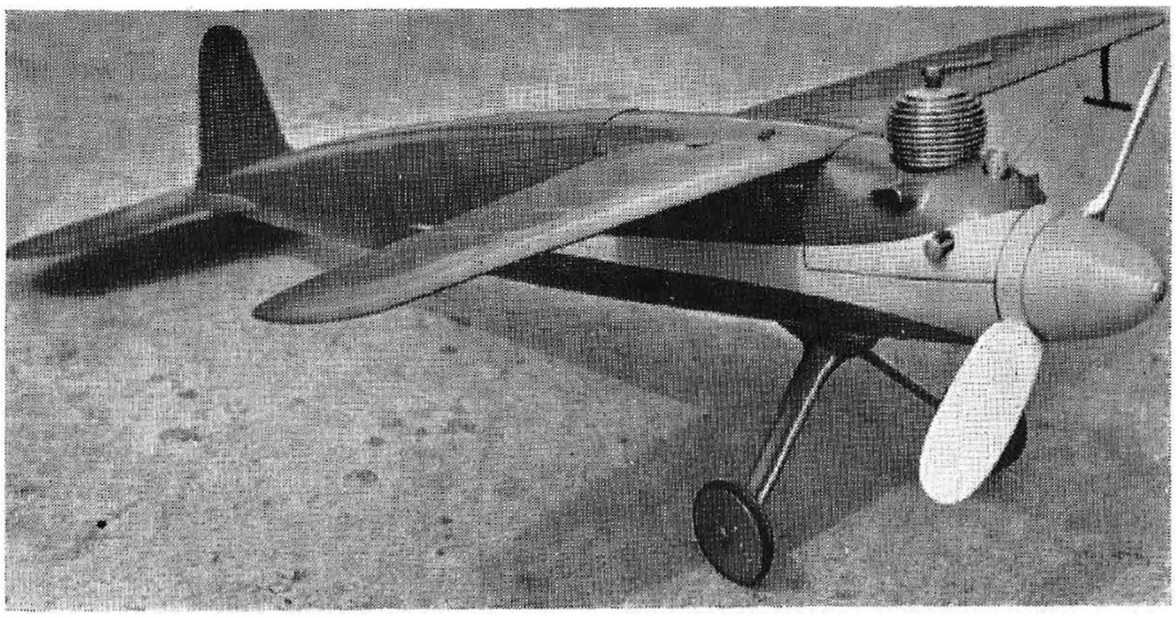

Movo M.31. Control Line Speed Model. An Italian design.

DESCRIPTION. The Movo M.31, designed by the Research Dept. of the famous Italian diesel engine and model aircraft company—probably the largest in that country—offers a number of points of interest to speed flyers. The high shoulder wing layout is a departure from the usual low or midwing layout favoured for speed models but appears to detract little or nothing from speed while making for simplicity. Undercarriage is of the drop off type, using a single prong fixing, centred by a guide over the landing skid. Versions are also flown with fixed streamline undercarriage, and in this rig have clocked over 80 m.p.h. with a 5 c.c. engine. Construction is mainly in hardwood, poplar or similar woods being used, with balsa used only for fairings. An innovation is seen in the fixing of the elevators, where small cabinet hinges are employed, screwed into the hardwood in the normal way. The propeller of walnut may excite comment, both on account of its wide almost paddle blades, and its deliberate unbalance, by letting a small block of lead into one blade only. In action this appears to give the flywheel effect claimed for it, but how the engine stands up to it is not known. Several Italian designs have, however, featured this curious departure. The M.31 is designed to use engines from 5–10 c.c., either petrol or diesel, while it seems particularly suited to one of the 5 c.c. glowplug motors, such as the Sportsman McCoy. The mainplane is designed for removal for access to control arrangements, electrics, or for ease of transport. Note also that it is set at a positive incidence of 2°.

DIMENSIONS.—Overall length 27 ins. Span 25¼ ins. Root chord 5¾ ins. Tailplane span 11¾ ins. Weight all-up approx. 2¾ lbs. Power 5–10 c.c., petrol or diesel. Speed up to 110 m.p.h., according to motor.

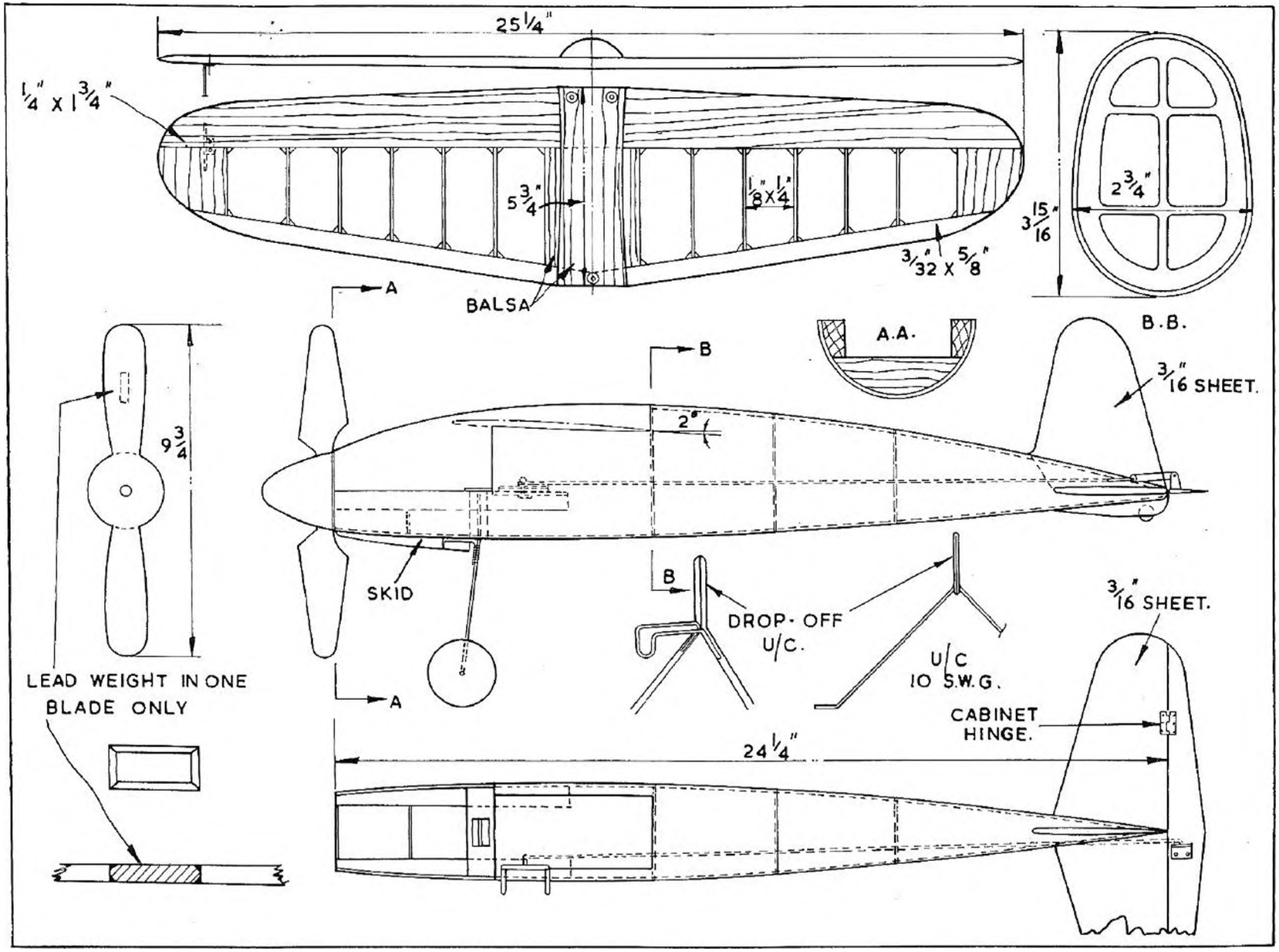
25 1/4"
1/4" x 1 3/4"
5 3/4"
1/8" x 1/4"
3/32" x 5/8"
BALSA
3 15/16"
2 3/4"
B.B.
A.A.
3/16" SHEET.
9 3/4
2°
SKID
DROP-OFF U/C.
U/C 10 S.W.G.
3/16" SHEET.
LEAD WEIGHT IN ONE BLADE ONLY
CABINET HINGE.
24 1/4"
A
B

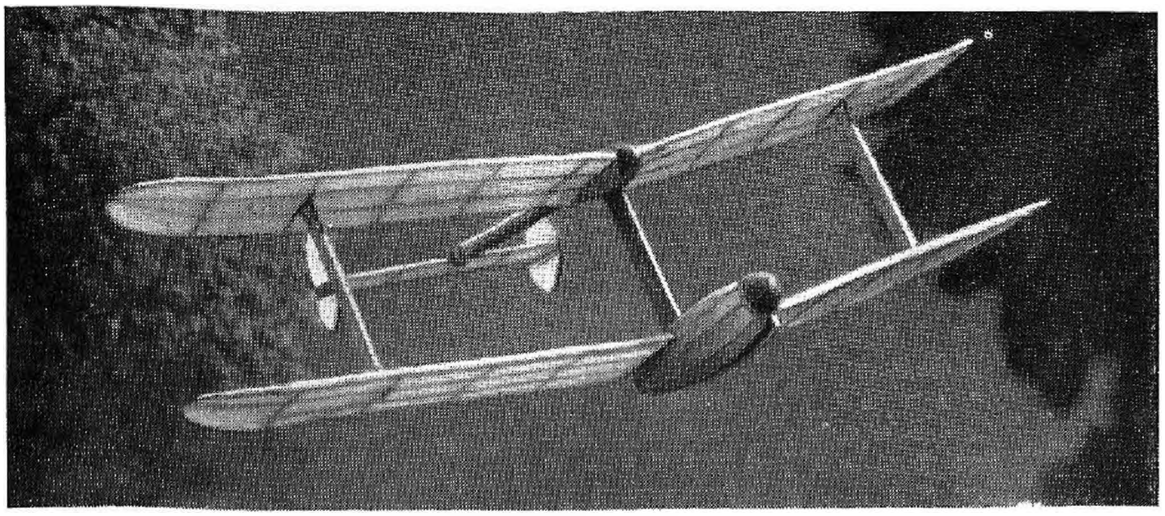

Peres III. Biplane Pod and Boom Glider by Ing. F. Piatelli.

DESCRIPTION.—This design from the Tel Aviv Experimental Centre for Aeromodelling and Low Speed Aerodynamics, inspired by Ing. Fidia Piatelli, well-known Italian aeromodeller now in charge there, offers the seeker after the unusual a truly interesting prototype. Built mainly of hardwood and hardwood veneer in the original, it should lend itself even more simply to standard balsa construction. Basically, it is a biplane of negative stagger, and over 2 : 1 gap, with small pod and boom extending from the upper wing, and main pod of streamline shape attached to the lower wing. Favourite Italian device of anti-lifting tail section (that is, with conventional lifting section upside down) as used in many of their flying boat and seaplane designs is the main feature of twin finned tail. No tow hook positions are indicated, but should lie approximately 3in. back from nose of pod. Covering is of tissue, including sheet covered boom.

DIMENSIONS : Span 39½ins. Length, 27¾ins. Wing area approx., 350 sq. ins. Mainplane chord, 5⅛ins. Tailplane span, 12ins., chord 4ins. Area, 48 sq. ins.

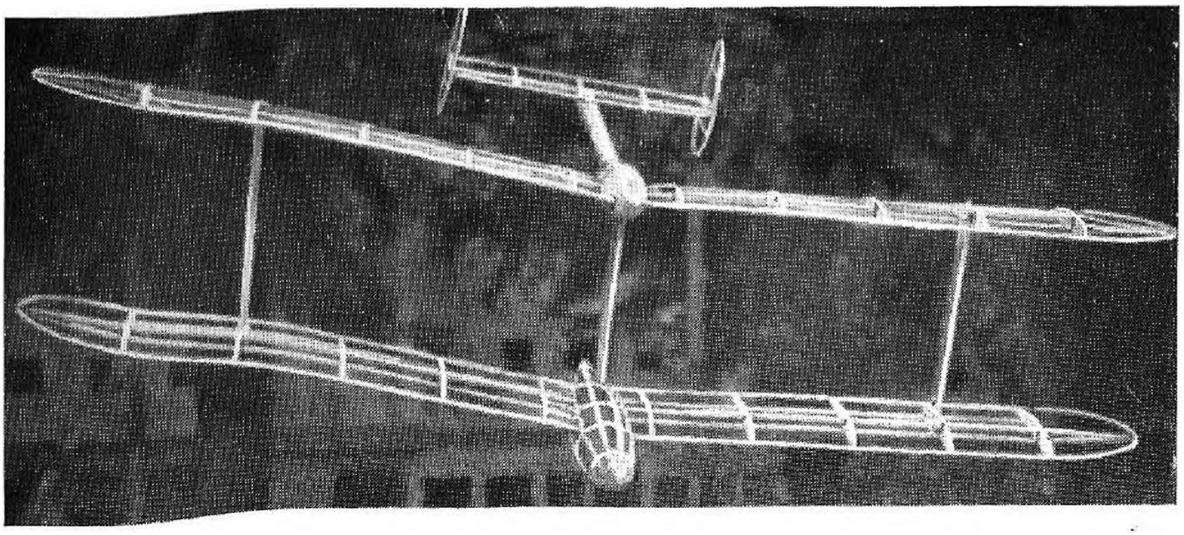

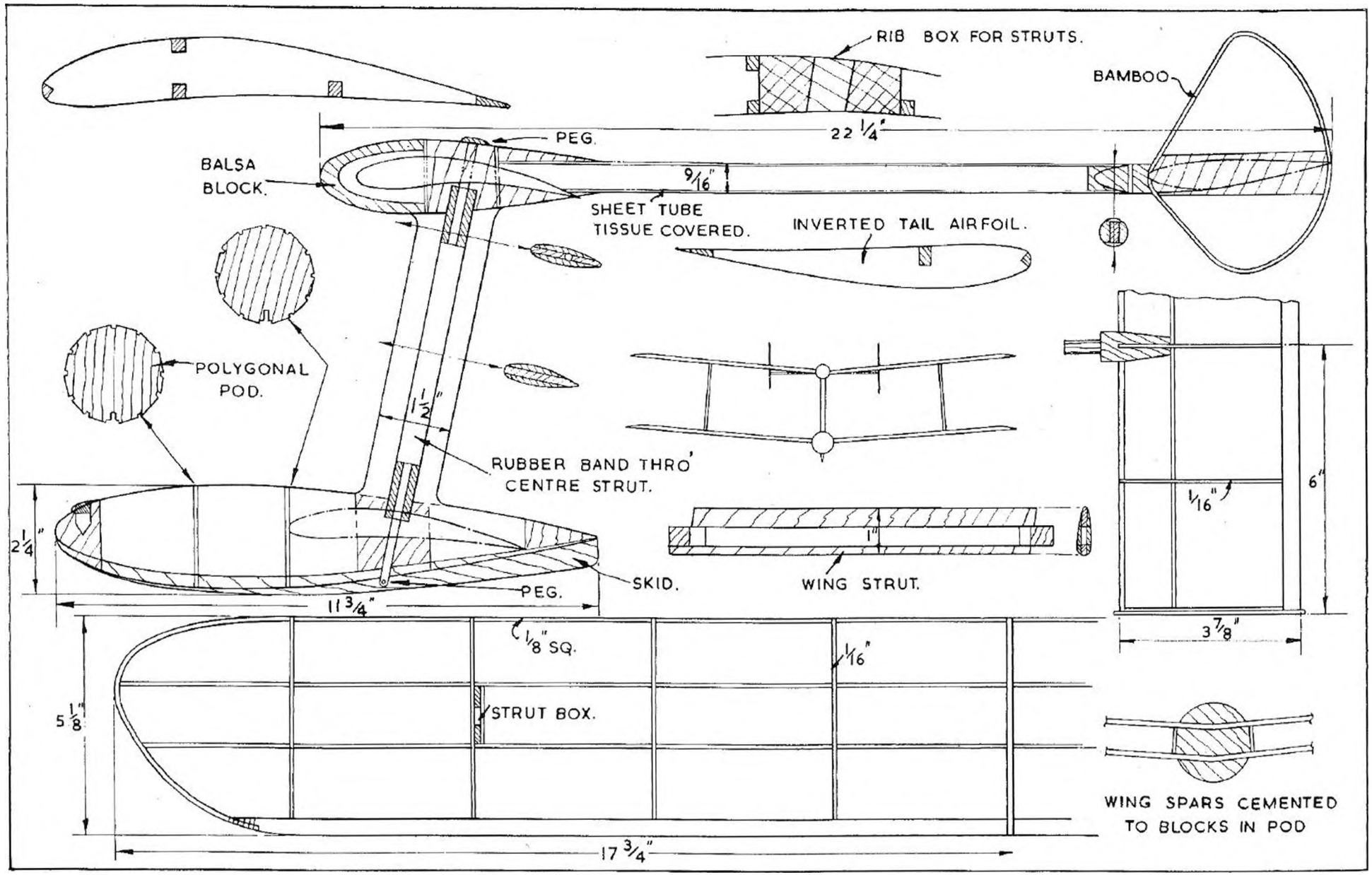
RIB BOX FOR STRUTS.
BAMBOO
22 1/4"
PEG.
BALSA BLOCK.
9/16"
SHEET TUBE TISSUE COVERED.
INVERTED TAIL AIRFOIL.
POLYGONAL POD.
1 1/2"
RUBBER BAND THRO' CENTRE STRUT.
2 1/4"
SKID.
PEG.
11 3/4"
1"
WING STRUT.
1/16"
6"
3 7/8"
1/8" SQ.
1/16"
5 1/8"
STRUT BOX.
17 3/4"
WING SPARS CEMENTED TO BLOCKS IN POD

Bikini. Diesel Powered Model by Jacques Morisset, France.

DESCRIPTION.—A free-flight profile fuselage open formula power model, designed before the new F.A.I. formula was established, but which, with very slight modification, could now be flown under F.A.I. regulations. The prototype was powered with an Allouchery Eclair 1.25 c.c. diesel, mounted as a side-winder on the port side, with ½° downthrust. Mainplane was set with 2° positive incidence, having washout to both wing tips, minus 3° on left wing, and minus 5° on the right wing; trimmed to fly in left hand circles. Wire struts—a popular French feature—helped to keep the wing in place. Single wheel rudimentary undercarriage. Tail surfaces were slightly tapering with sweepback on leading edge, and set at 0°. Usual French style twin fins of horizontal elliptical shape.

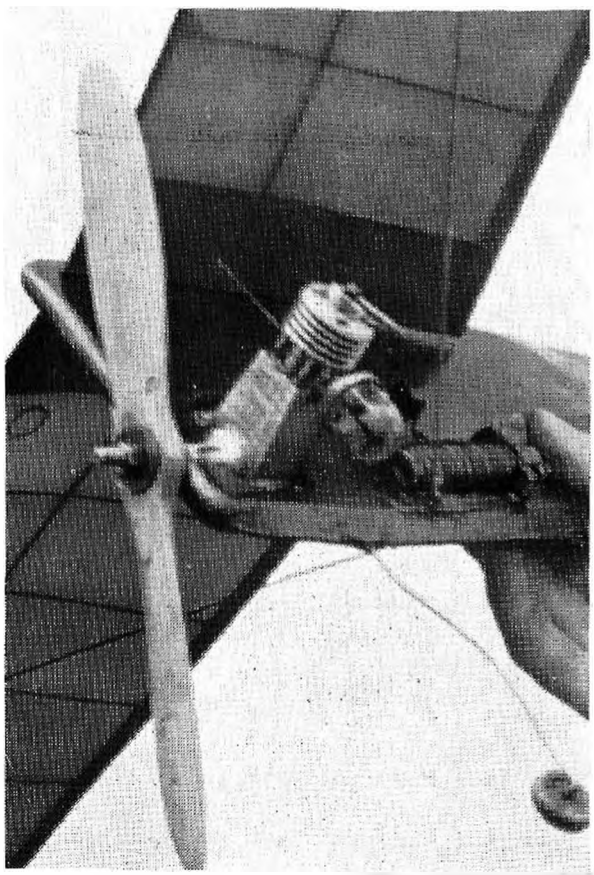

PERFORMANCE.—Bikini I was developed in 1946 for first International meeting at Eaton Bray and won on August 18th with a flight of 3 : 37 with a 20 second power run, or expressed as a ratio 10.8. Bikini II, a similar model modified with polyhedralled tips, placed 12th at Frauenfeld in the Swiss International Meeting with a ratio of 9.73. In August of the same year Bikini II placed 3rd in the Geneva Grand Prix, with a best flight of 14: 39 o.o.s., having previously had a 4 min. flight without thermal assistance to give a ratio of 10.5.

DIMENSIONS.—Span 59 ins., length overall 39½ ins. Mainplane chord 7 ins. Airfoil section: Designer's own thin undercambered, with C.G. 70/80% from l.e. Tail airfoil section plans convex. Wing area 385 sq. ins. Weight 11¼ oz.

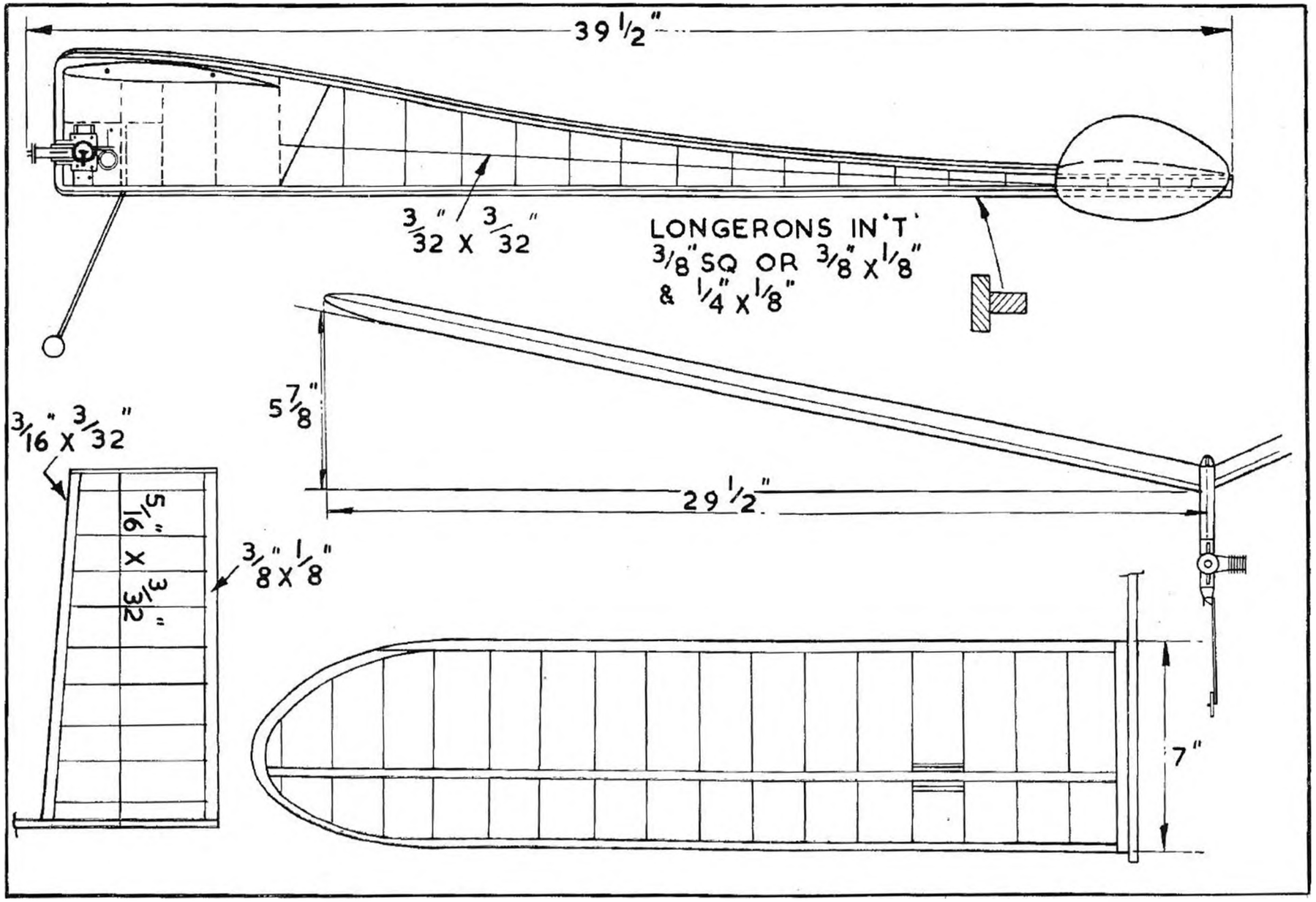
39 1/2"
3/32" X 3/32"
LONGERONS IN 'T'
3/8" SQ OR 3/8" X 1/8"
& 1/4" X 1/8"
5 7/8"
29 1/2"
3/16" X 3/32"
5/16" X 3/32"
3/8" X 1/8"
7"

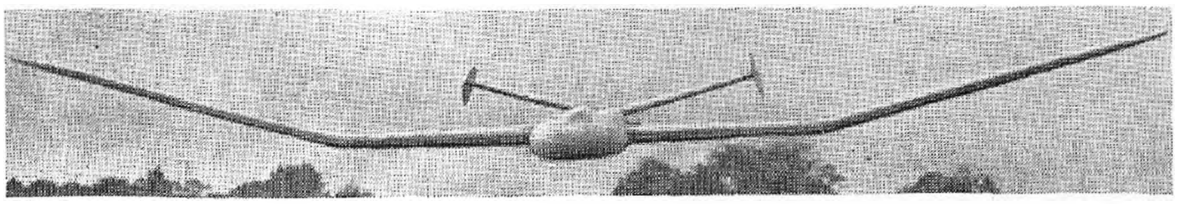

Bydule. High performance Sailplane by M. J. Tantet, France.

DESCRIPTION.—Bydule is a design that apart from its good looks, embodies a number of safety devices to ensure the longest possible undamaged flying life. Wings are attached on the step principle, first seen on a Dutch Wakefield in 1937, and embodied in Dr. Forster's successful Spitfire power model. The whole tail unit is attached by a spring-loaded dowel. On the line twin fins are fixed, but as the tow-line eye comes away it pulls out a pin allowing one fin to spring round to give an easy circular flight path. The flat lifting fuselage is fully sheeted, and supported by a large number of formers at intervals of approximately 1 in. down its entire length. Tip dihedralled wings, with sheeted leading edge, continue the fuselage line for 12 ins. and then turn up to a 4 in. dihedral at tips. Tailplane is dihedralled at the same angle, giving tip rise of 2 ins. Note that the fins are attached at right angles to the tailplane, that is they are toed in from the vertical.

DIMENSIONS.—Span, 56 ins. Length, 35½ ins. Root chord, 8½ ins. Tip, 4 ins. Tailplane half span, 8½ ins.

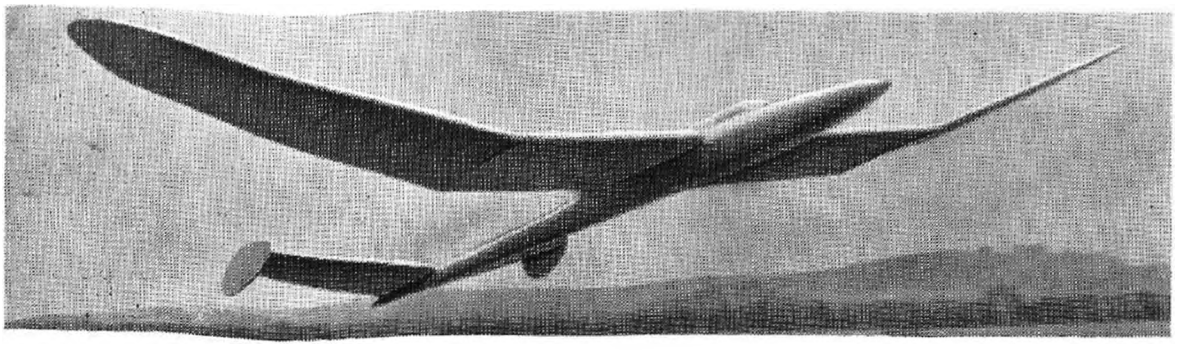

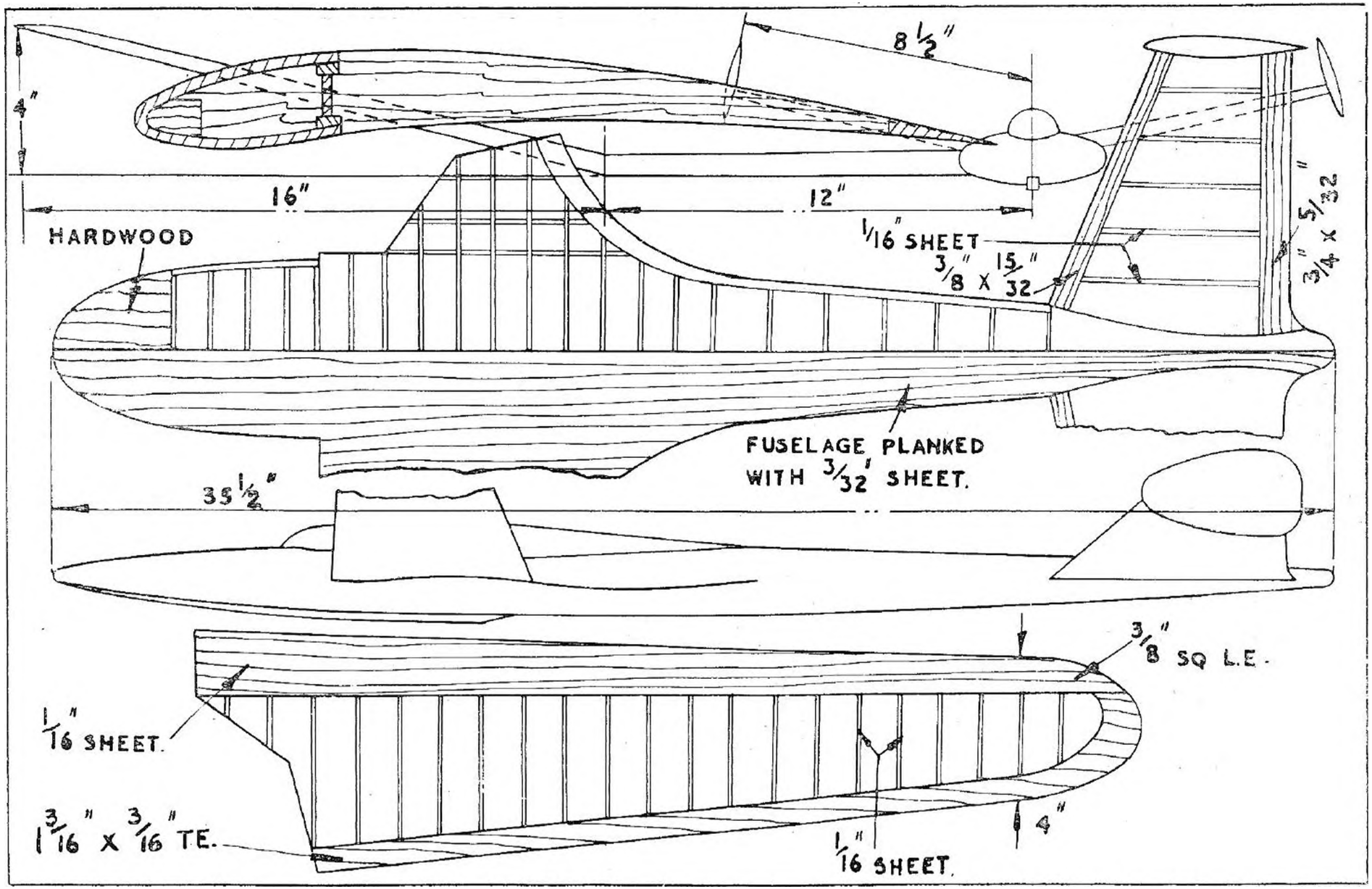
8 1/2"
4"
16"
12"
HARDWOOD
1/16" SHEET
3/8" X 15/32"
3/4" x 5/32"
FUSELAGE PLANKED
WITH 3/32" SHEET.
35 1/2"
3/8" SQ L.E.
1/16" SHEET.
1 3/16" X 3/16" TE.
1/16" SHEET.
4"

D.129. Swiss Sailplane designed by Swiss Aero Club Model Research Department.

DESCRIPTION.—This interesting sailplane was developed as a test bed for low-wing research, and by using the specially designed alternative fuselages can be flown equally well as a towlaunch model or for slope soaring from a hand launch. Incidentally, the deeper of the two fuselages shown in plan is intended for slope soaring. Experiments showed that a variety of aerofoil sections gave more or less equally good results. These included Gottingen 301 (Positive incidence $2\frac{1}{2}°$), N.A.C.A. 6409 (positive incidence $1\frac{1}{2}°$), R.A.F. 32 (positive incidence $1\frac{1}{2}°$) for the towlaunch version and Gottingen 602 (positive incidence 1.2°) for the slope soarer. In all cases a thinned Clark Y of 80-90% standard was used for tailplane section. Construction experiments found that it could equally well be built of all hardwood, hardwood and balsa and even substantially of all balsa. A number of these models and variants have been built and flown successfully by Swiss enthusiasts, and the Research Department of the Swiss Aero Club would be interested to hear from any other constructors on performance obtained and on modifications.

The model shown below belongs to the same school of thought and shows a similar layout. Main differences are improved shape of fuselage and changed fin and tail shapes and locations. Builder/flyer is Beny Schibler.

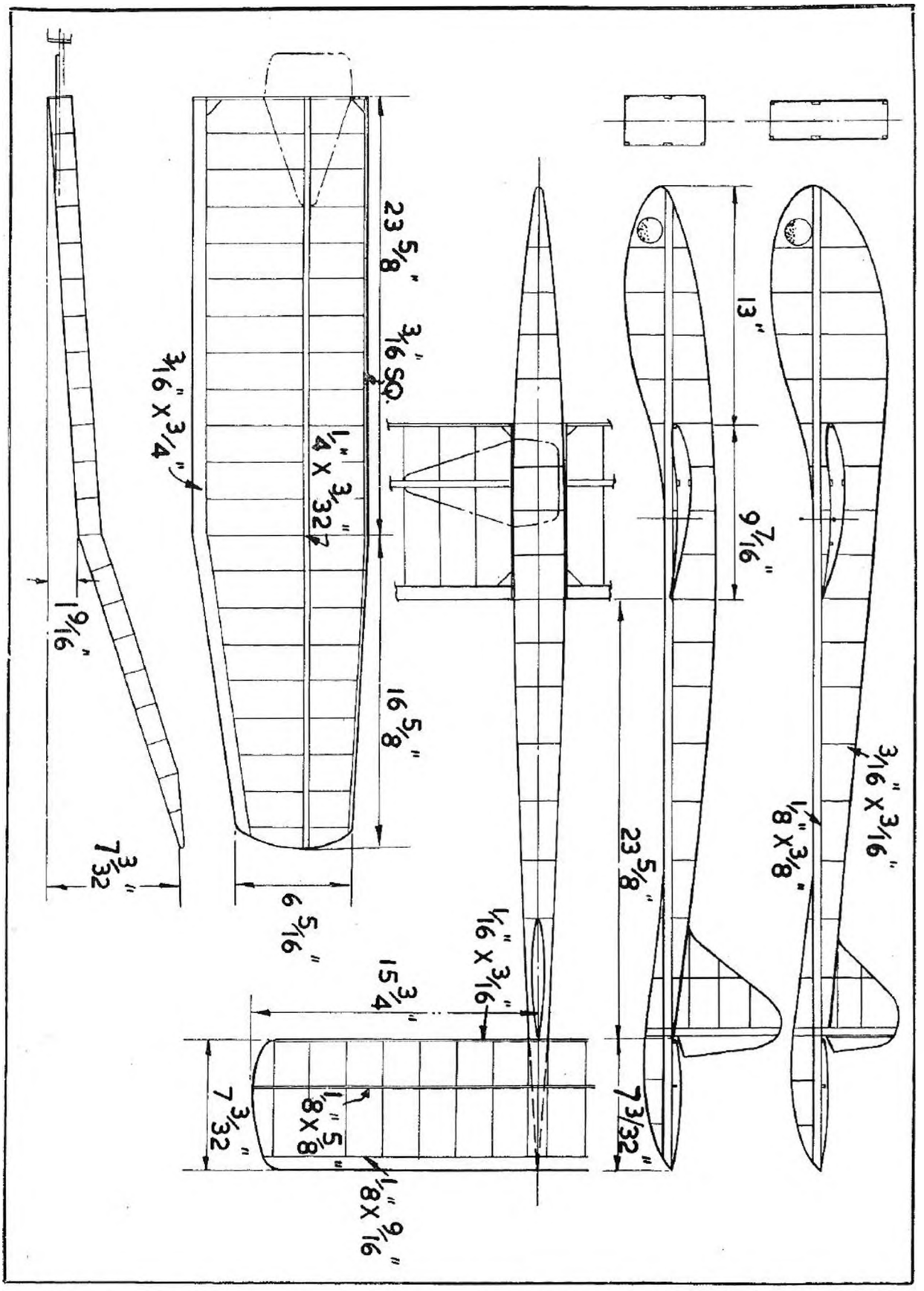

DIMENSIONS.—Span 81ins. (Can be successfully built down in size to 60ins. without loss of characteristic performance.) Root chord 10ins., tip $6\frac{5}{16}$ins. Overall length $53\frac{5}{32}$ins. Tailplane span $31\frac{1}{2}$ins. Chord $7\frac{3}{32}$ins.

Banshee. American Pylon Power Winner designed by Leon Shulman.

DESCRIPTION.—This model is the second of a series of three : Zombie, Banshee, Zoomer—developed by the designer to give fast spiral climb, low drag and consequently flat glide. Banshee as the middle model of the trio is perhaps the most suitable for the average enthusiast, sporting some of the improvements developed from the Zombie without the trickier trim and streamlining refinements of Zoomer. Constructional methods employed on fuselage of Banshee are particularly interesting. A sheet crutch to plan form is laid down on which sheet pylon and sheet side elevation outlines are erected on the centreline, suitably braced with gussetlike formers, thus producing an ×-shaped structure, which, when covered gives a diamond-shaped fuselage of considerable strength for low weight and speedy construction. Wings feature a thinned NACA6409 aerofoil section and embody polyhedral. Braces are stronger than usual owing to overlap of mainspars in addition to usual ply keepers. Symmetrical tailplane has anti-spin sub-rudders depending from its underside, which certainly perform their designed function. Shulman designed Banshee as far back as 1941, but its American popularity was not achieved until after the war. Incidentally, Astrals have just put up Banshee in kit form so that we can look forward to seeing them well to the fore at next season's contests.

PERFORMANCE.—Gussie and Mrs. Gunter's competition successes in 1947 may be said to mark the beginning of the cult of the Banshee in this country. During 1948 they were prominent at the Nationals, while Ron Warring appropriately enough won the Astral trophy with one.

DIMENSIONS.—Span 50 ins. Length $32\frac{1}{4}$ ins. Root chord 9 ins. Tailplane span 22 ins. Root chord 7 ins. Fixed monowheel undercarriage. Polyhedral $1\frac{1}{2}$ in. at break, total $8\frac{3}{4}$ ins. each wing.

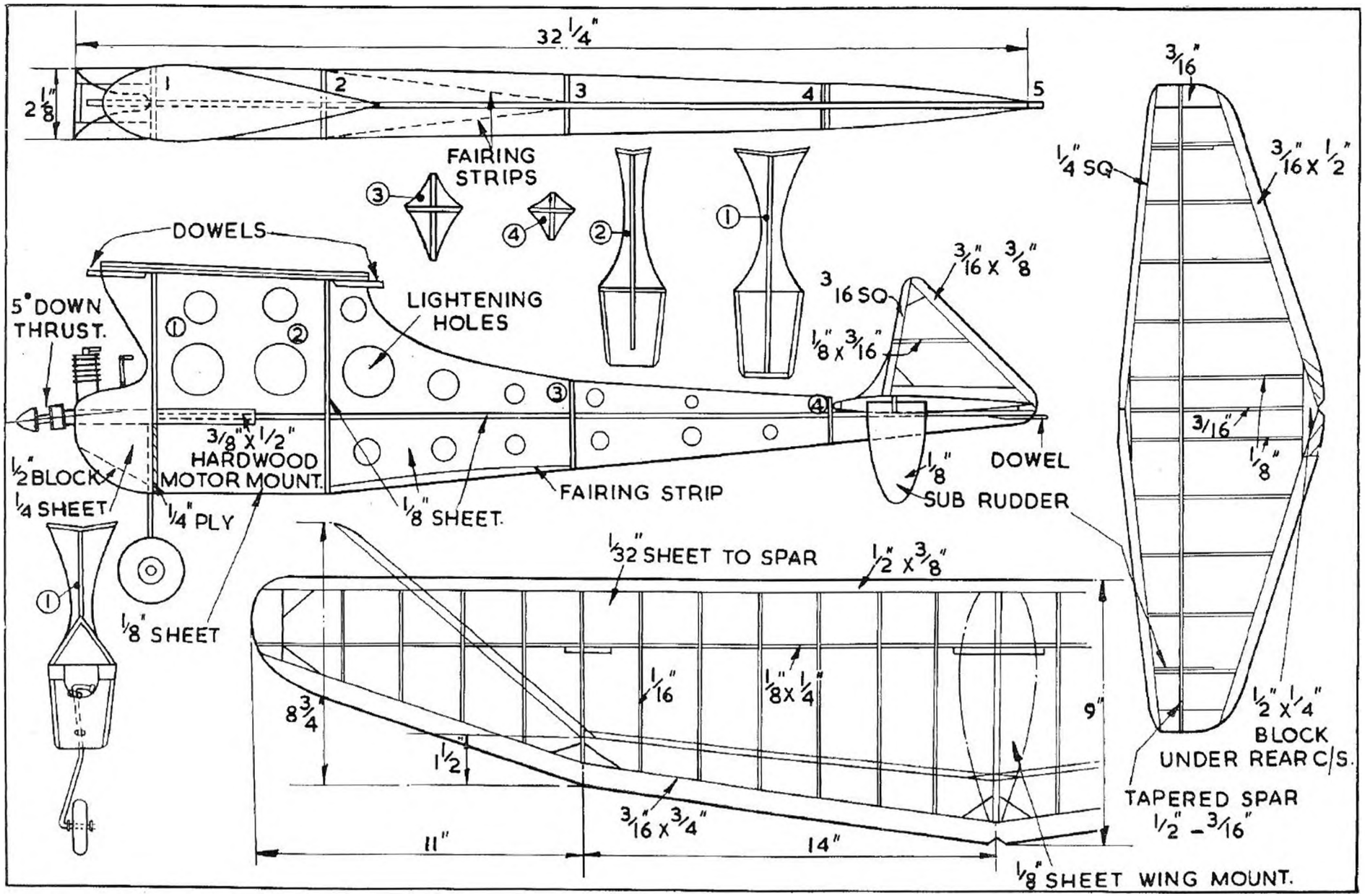
32 1/4"
2 1/8"
1
2
3
4
5
FAIRING STRIPS
DOWELS
5° DOWN THRUST.
LIGHTENING HOLES
3/8" X 1/2" HARDWOOD MOTOR MOUNT.
1/2" BLOCK
1/4 SHEET
1/4" PLY
1/8" SHEET.
FAIRING STRIP
1/8" SHEET
3/16 SQ
3/16" X 3/8"
1/8" X 3/16"
1/8"
DOWEL
SUB RUDDER
1/32" SHEET TO SPAR
1/2" X 3/8"
1/16"
1/8" X 1/4"
8 3/4"
1 1/2"
3/16" X 3/4"
11"
14"
9"
1/8" SHEET WING MOUNT.
3/16"
1/4" SQ
3/16" X 1/2"
3/16"
1/8"
1/2" X 1/4" BLOCK UNDER REAR C/S.
TAPERED SPAR 1/2" - 3/16"

Murchiangelo. S. American Power Design.

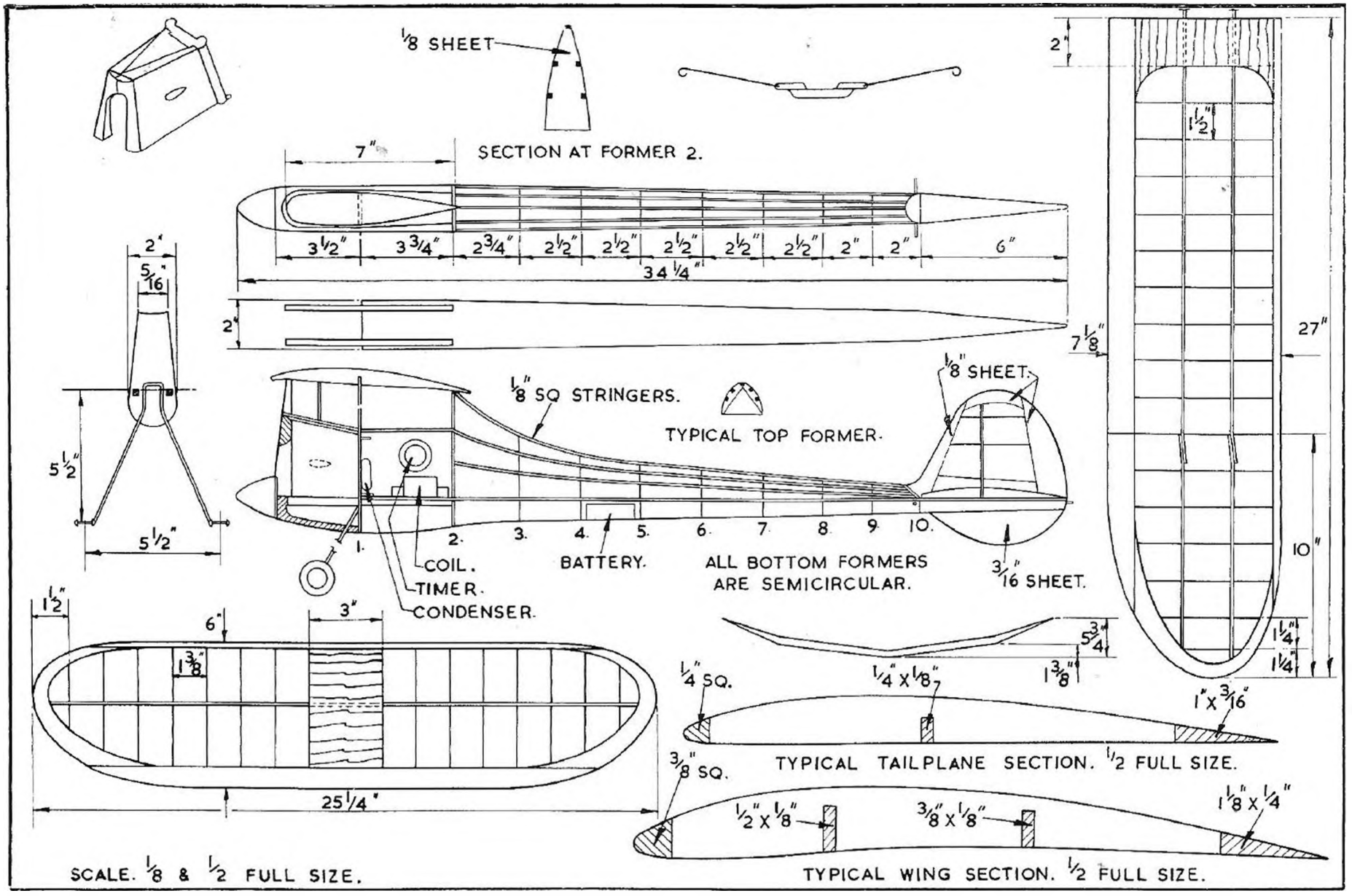

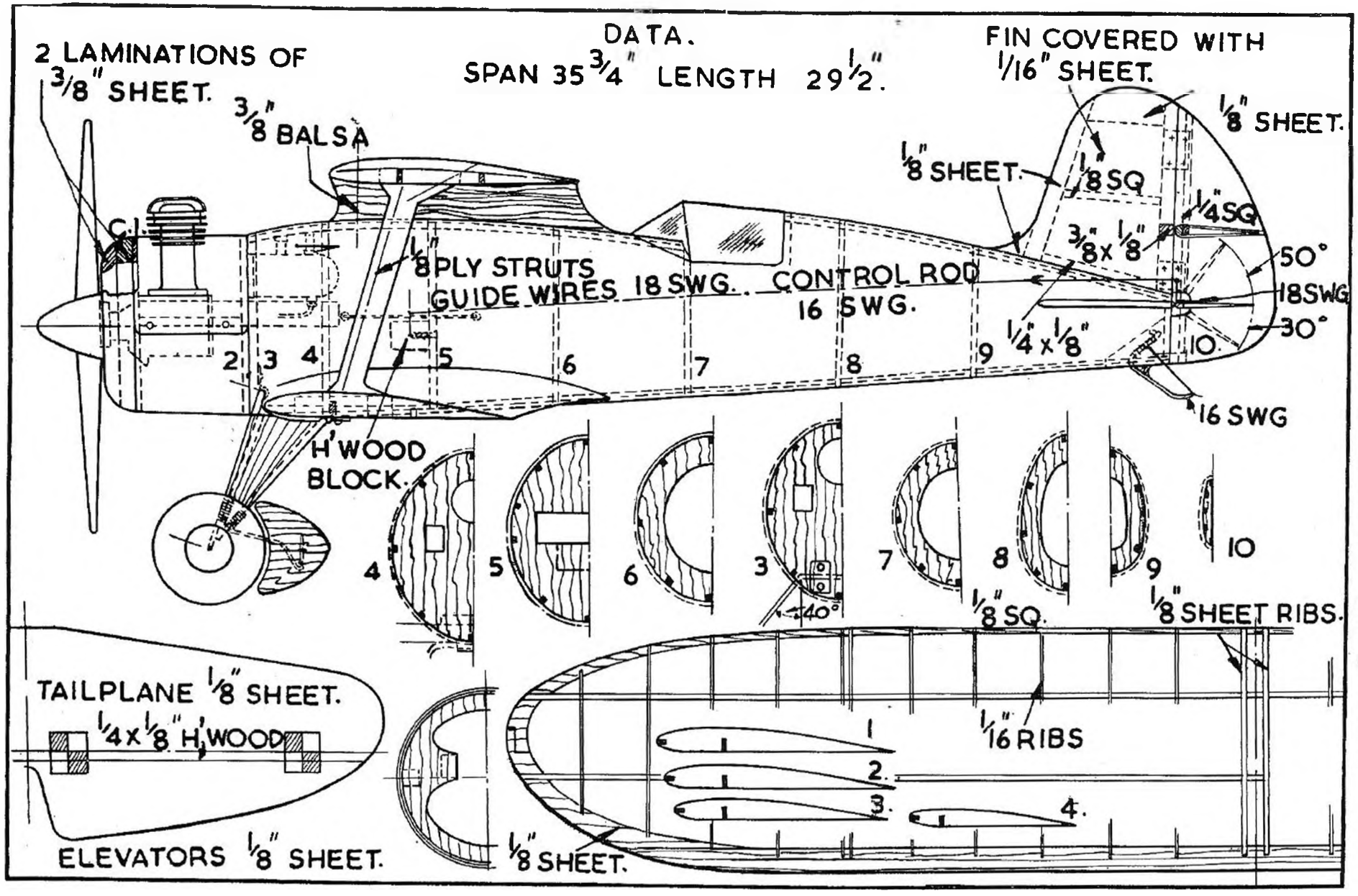

Dervish. French Stunt Control Line Champion 1948

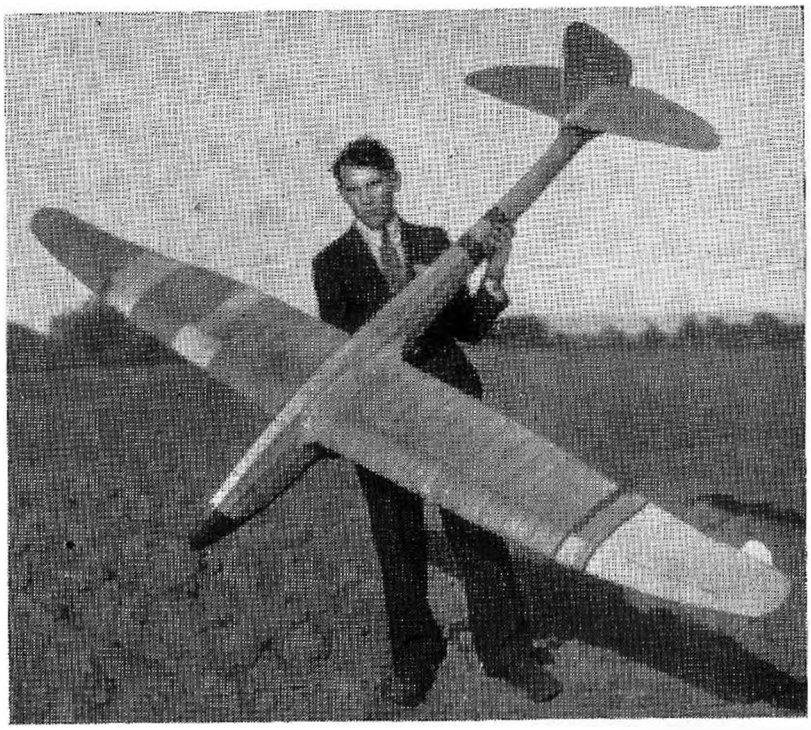

This picture of Star 13 shows indications of considerable repair work—which serve to emphasize the general shortage of materials. Note what appears to be a trimming tab on one wing only.

photo: Antusch

Star 13. Post-war German Sailplane.

DESCRIPTION. Aeromodellers in Germany are having such a very difficult time, what with shortage of materials and the need for licensing of model aircraft clubs, that we are glad to be able to publish details of this interesting and successful sailplane. We must not inquire too deeply into the materials used, which may be anything from salvaged timber from a bombed house to carefully hoarded items from times of plenty years ago. Things are getting better now, and we note with interest the first properly printed German model magazine has now been published under the title of "Modellflug Gleit Post." —although only eight pages, plus two-colour cover, we welcome it as a step in the right direction. Star 13 is the latest design by K. H. Stadler of Nuremberg, and is a development of a similar model built by his brother George in 1943, for which a distance record of 19 km. was claimed. Unusual in German models fuselage is multi-stringer to a semi-streamline shape, with high mid-wing wing location. These taper elliptically and favour RAF 32 profile. Tailplane is symmetrical. Incidence settings are mainplane $2\frac{1}{2}°$ positive, tailplane $\frac{1}{2}°$ negative.

PERFORMANCE. Average time from normal 328 ft. towlaunch is from 3-5 minutes. Best time recorded for the model is just over $2\frac{1}{2}$ hours, when it travelled a distance of 12 km. Showed up well at Stuttgart and Dortmund Contests—and may be described as outstanding of post-war models.

DIMENSIONS : Span $135\frac{1}{2}$ ins. Root chord, $13\frac{7}{8}$ ins., tip 5 in. Overall length $76\frac{5}{8}$ ins. Tailplane span, $42\frac{3}{4}$ ins. Weight in flying trim approx., $53\frac{1}{2}$ ozs.

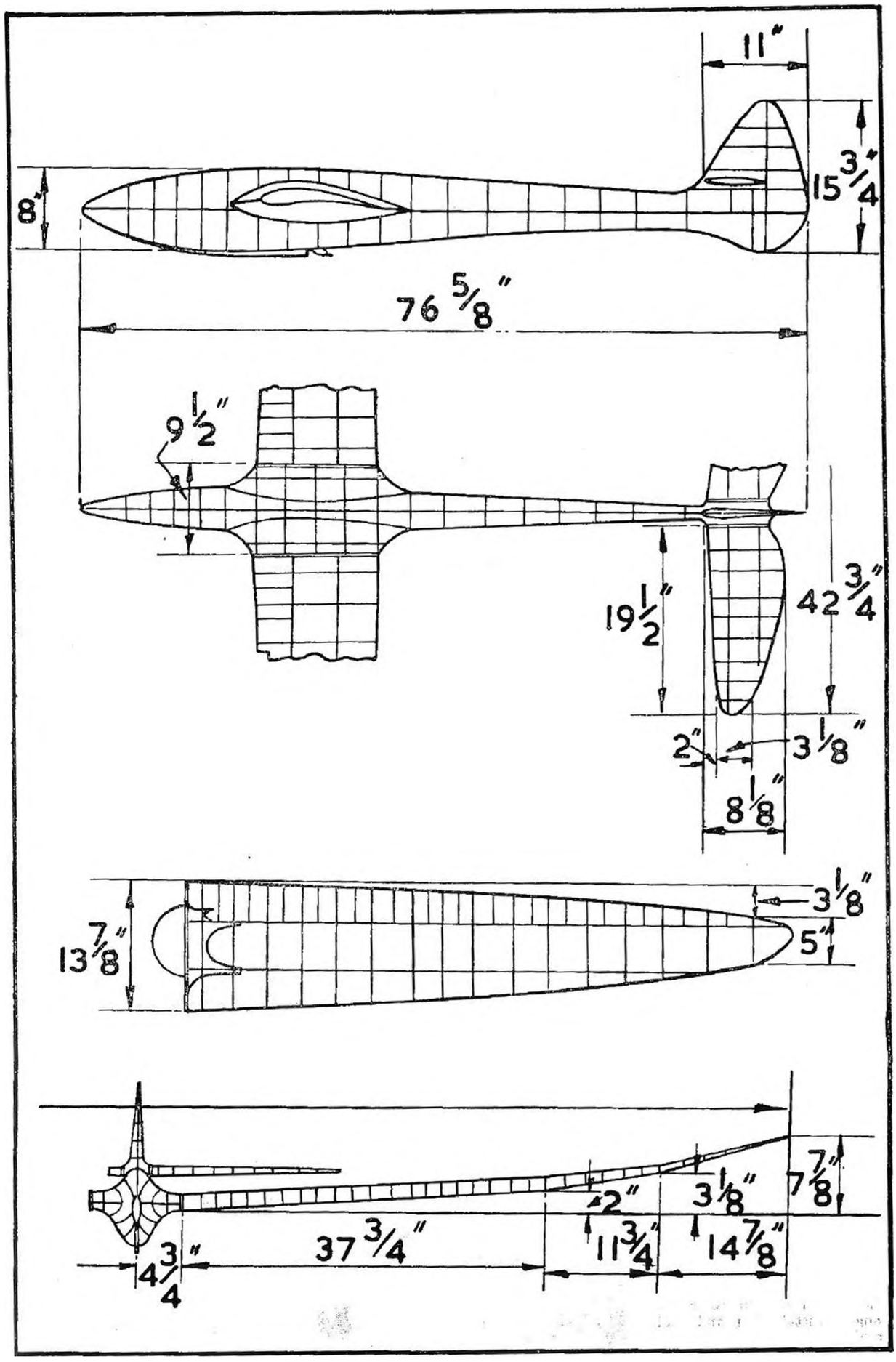
11"
8"
15 3/4"
76 5/8"
9 1/2"
19 1/2"
42 3/4"
2"
3 1/8"
8 1/8"
13 7/8"
3 1/8"
5"
7 7/8"
2"
3 1/8"
4 3/4"
37 3/4"
11 3/4"
14 7/8"

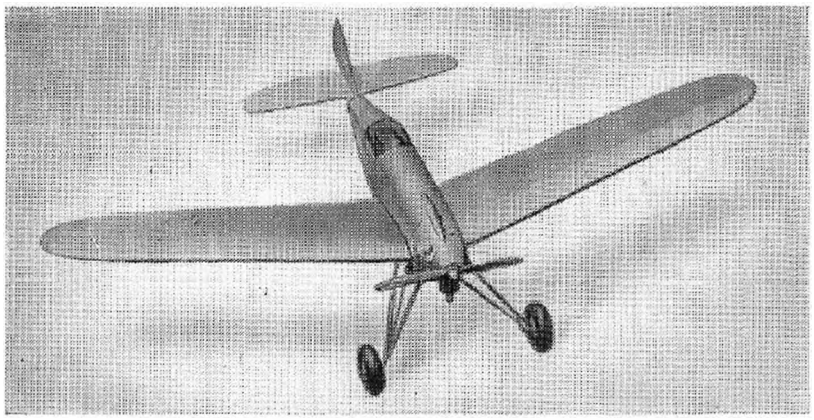

The model looks just as neat and efficient as its flight proves it to be. Note offset trim tab to rudder.

Semi-Scale Power Model. By Schiffermuller, France.

DESCRIPTION.—This delightful little semi-scale model was first demonstrated to us in 1946, fitted with an own design spark ignition engine of under 1 c.c., featuring magneto ignition. The production of many under 1 c.c. diesels brings it within the reach of anyone who has ever built a successful model. Both R.O.G. and hand-launch it proved very stable and most realistic in flight. Tail and fin are simple sheet balsa construction, while mainplane is normal sheeted leading edge. Fuselage, in the original, was monocoque balsa construction, but there is no reason why it should not be built as a slabsider with turtle back. Wings are fixed in place permanently, and, as is usual with low wings, have fairly large dihedral. Wheels come well forward and protect the engine and prop from landing damage. Mr. Schiffermuller had fitted a very ingenious auxiliary fuel tank, which was fed from the main supply. When he was ready for a flight a stopcock cut off the main tank leaving exactly twenty seconds' running time in the sub-tank, thus saving the weight of a timer, and enabling quite a number of flights to be made without refilling.

DIMENSIONS.—Span 29 ins. Chord $5\frac{1}{2}$ ins. Length $19\frac{3}{8}$ ins. Tailspan 10 ins. Mainplane airfoil section Gottingen 436. 5° downthrust to engine. No sidethrust, but trim tab on fin adjusted to counteract. Tailplane at 0° incidence. Mainplane 2° positive.

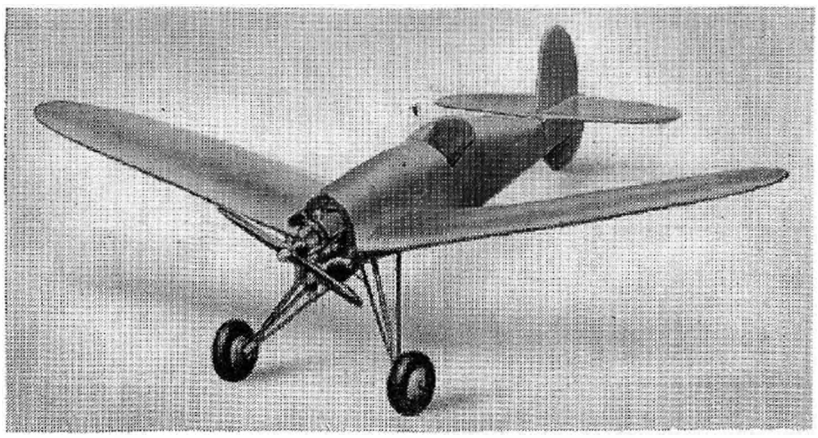

Cowling removed to show engine installation and fuel tank.

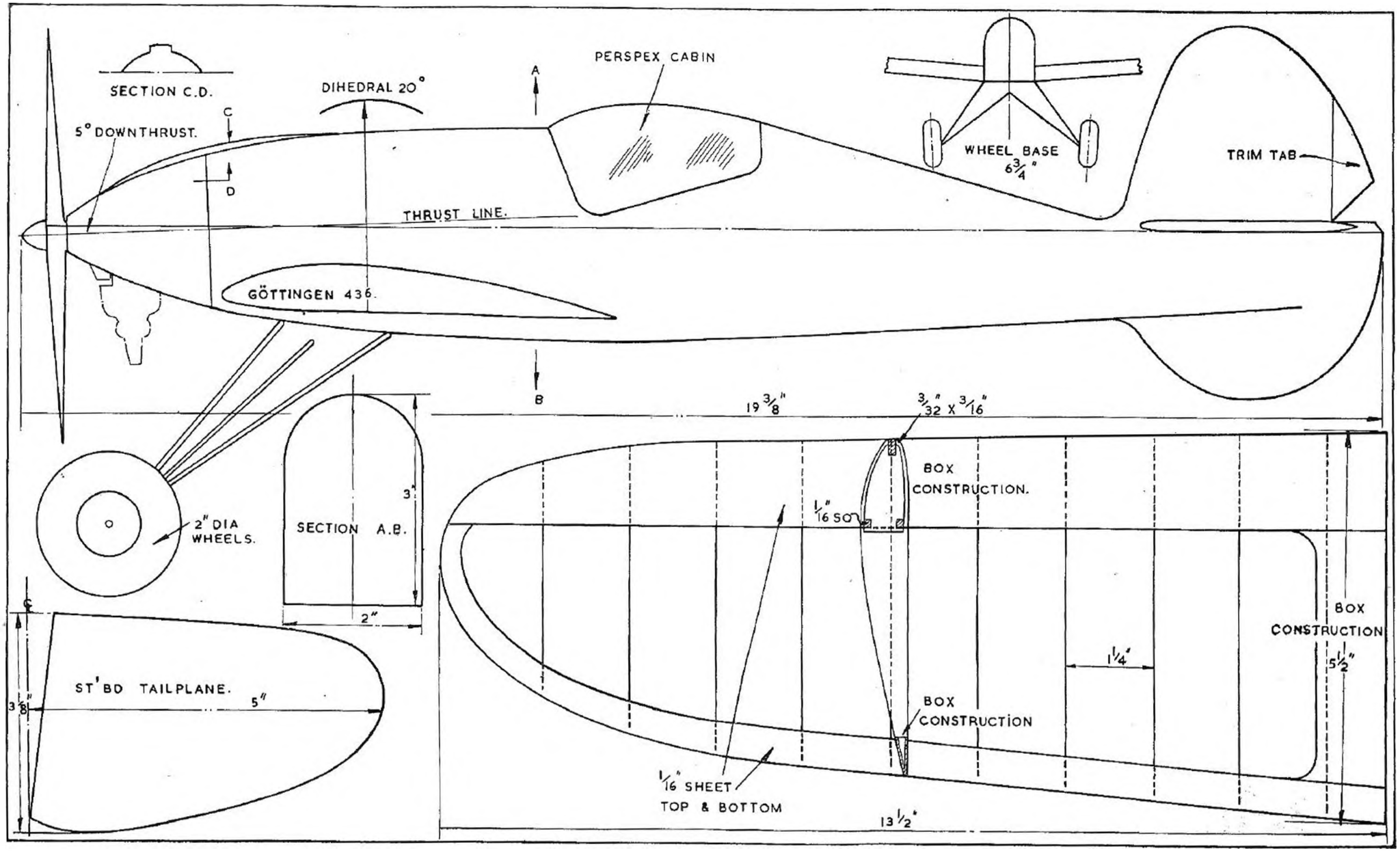
SECTION C.D.
DIHEDRAL 20°
A
PERSPEX CABIN
C
5° DOWNTHRUST.
D
WHEEL BASE
6 3/4"
TRIM TAB
THRUST LINE.
GÖTTINGEN 436.
B
19 3/8"
3/32" X 3/16"
BOX
CONSTRUCTION.
1/16" SQ
2" DIA
WHEELS.
SECTION A.B.
3"
2"
BOX
CONSTRUCTION
1 1/4"
5 1/2"
ST'BD TAILPLANE.
3 3/8"
5"
BOX
CONSTRUCTION
1/16" SHEET
TOP & BOTTOM
13 1/2"

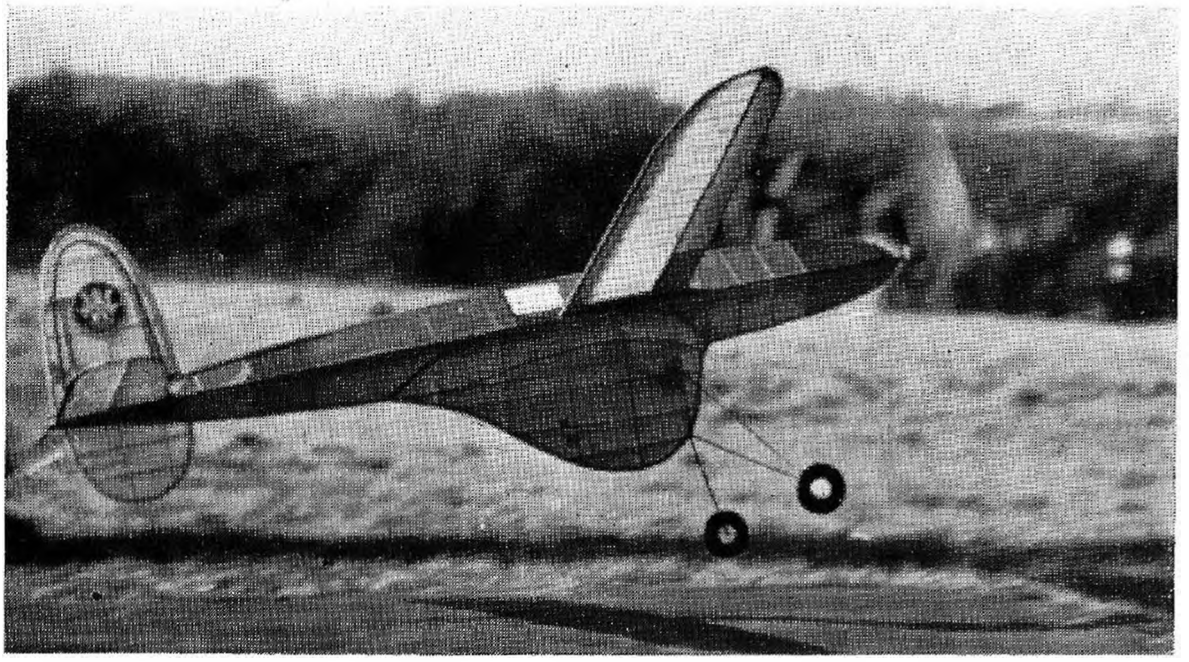

Jaguar. 1948 Wakefield Winner designed by E. W. Evans.

DESCRIPTION.—E. W. Evans' Jaguar Wakefield has been "news" almost since its inception and first appearance on the contest field. First mention in *Aeromodeller* in September, 1947, was guarded : ". . . an unusual Wakefield model designed by Mr. Evans. Many replicas such as this, flown by members of the Northampton Club, have met with considerable success." But by November of that year it was well enough known to have jokes passed on its bellied under fin, as : ". . . particular merit was E. W. Evans' three flight aggregate of 483.2 secs. gained with that familiar Wakefield described by many as being in a 'certain condition'." In 1948 its successes have continued to mount, both in the hands of the designer, and his fellow-clubmen, until it reached the height of rubber model achievement by winning the Wakefield Trophy for this country flown by Northampton clubman Roy Chesterton.

In designing the model Evans kept no less than thirteen main points in view, of which the principal were :—

> High power to weight ratio (50/50 aimed at) ; ease of construction and repair ; freedom from gadgets ; largest practical diameter airscrew without detriment to glide ; undercarriage to be positioned nearer the c.g. to allow for more rapid take-off ; largest wingspan without increasing aspect ratio to a ridiculous proportion ; drag to be kept to a minimum ; positive adjustment of all surfaces ; portability ; normal duration of 4/4½ minutes.

Unusual feature that undoubtedly contributes much to its really outstanding performance is the forward underfin belly, that locates lateral area well forward and partly encloses the undercarriage. It is built supplementary to main fuselage structure, so that weight or strength of this is not adversely affected.

Of the thirteen features in the design specification every one

was met in the final Jaguar which flew virtually from the drawing board. Features as flown may be briefly summarised as :

(1) Streamlining carried out in a practical way without additional weight.
(2) High power to weight ratio, without sacrificing strength.
(3) Total weight kept to required minimum.
(4) Freedom from structural failures.

PERFORMANCE.—Principal successes include 1947 Midland Rally with wet weather aggregate of 483.2 secs and second with 457 secs. ; M.E. No. 2 Cup, 1947, 429 secs. ; 2nd Eaton Bray International Week, 445 secs. ; Gutteridge 2nd, 627 secs. In 1948 successes include : Weston Cup, 342.1 secs. ; Gutteridge 1st and 2nd with 624 and 619 secs. ; Final Wakefield Trials, 465.25 secs. ; 1st Eaton Bray Third International Week, 237 secs ; Wakefield Trophy 1948 (*see* detailed results, page 53).

DIMENSIONS.—Span 44½ ins. Root chord 5¾ ins. tapering to 3 ins. at tip. Wingsection RAF32. Dihedral 4⅛ ins. under each tip. Fuselage overall length 37 ins. Tailplane 19 ins. span, tapering l/e, straight t/e. Fined Clark Y. All up weight 8¼ ozs. Airscrew 18½ ins. diameter two blade normal freewheeling type. Power 14 strands ¼ × 1/24, 48 ins. long, or 18 strands ¼ × 1/30 48 ins. long. Maximum turns 950.

Heading shows a Jaguar in action; quick reliable take-off is a feature of the design. Below is seen designer E. W. Evans lighting a Jaguar dethermaliser fuse— a *sine qua non* in most sorts of weather if the model is required again.

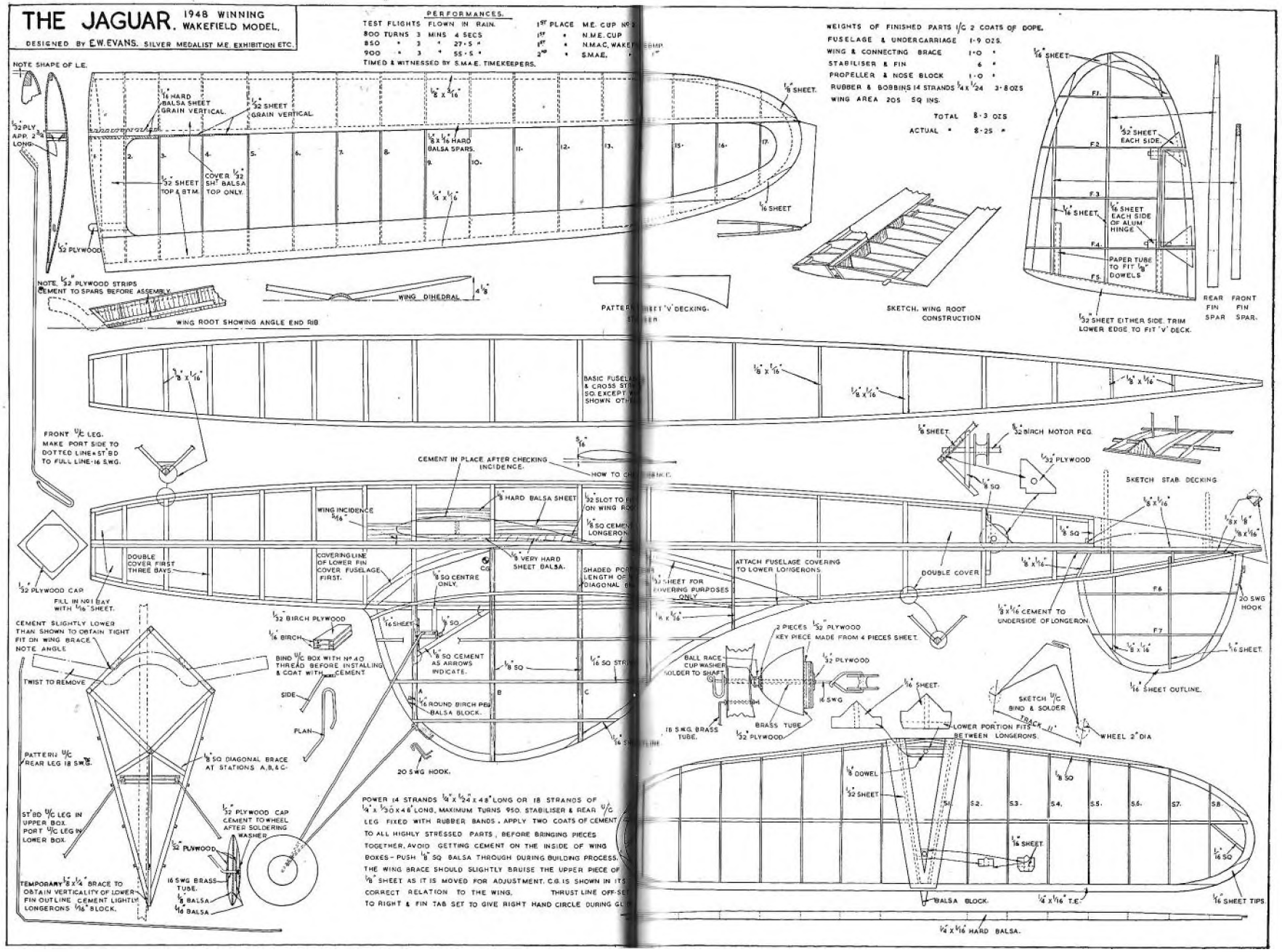
THE JAGUAR. 1948 WINNING WAKEFIELD MODEL.
DESIGNED BY E.W. EVANS. SILVER MEDALIST M.E. EXHIBITION ETC.
PERFORMANCES.
TEST FLIGHTS FLOWN IN RAIN.
800 TURNS 3 MINS 4 SECS
850 " 3 " 27·5 "
900 " 3 " 55·5 "
TIMED & WITNESSED BY S.M.A.E. TIMEKEEPERS.
1ST PLACE M.E. CUP
1ST " N.M.E. CUP
1ST " N.M.A.C. WAKEFIELD CUP
2ND " S.M.A.E.
WEIGHTS OF FINISHED PARTS 1/C 2 COATS OF DOPE.
FUSELAGE & UNDERCARRIAGE 1·9 OZS.
WING & CONNECTING BRACE 1·0 "
STABILISER & FIN 6 "
PROPELLER & NOSE BLOCK 1·0 "
RUBBER & BOBBINS 14 STRANDS 3/4 x 1/24 3·8 OZS
WING AREA 205 SQ INS.
TOTAL 8·3 OZS
ACTUAL " 8·25 "
NOTE SHAPE OF LE.
1/32 PLY APP. 2 3/4 LONG
1/16 HARD BALSA SHEET GRAIN VERTICAL.
1/32 SHEET GRAIN VERTICAL.
1/8 x 1/16
1/8 x 1/16 HARD BALSA SPARS.
1/32 SHEET TOP & BTM.
COVER 1/32 SHT BALSA TOP ONLY.
1/4 x 1/16
1/8 SHEET.
1/16 SHEET
1/32 PLYWOOD
NOTE. 1/32 PLYWOOD STRIPS CEMENT TO SPARS BEFORE ASSEMBLY.
WING ROOT SHOWING ANGLE END RIB
WING DIHEDRAL
4 1/8
PATTERN SHEET 'V' DECKING.
SKETCH. WING ROOT CONSTRUCTION
1/16 SHEET
F1.
F2.
F3.
F4.
F5.
1/32 SHEET EACH SIDE.
1/16 SHEET
1/16 SHEET EACH SIDE OF ALUM HINGE
PAPER TUBE TO FIT 1/8 DOWELS
1/32 SHEET EITHER SIDE. TRIM LOWER EDGE TO FIT 'V' DECK.
REAR FIN SPAR
FRONT FIN SPAR.
1/8 x 1/16
BASIC FUSELAGE & CROSS STRUTS SQ. EXCEPT AS SHOWN OTHERWISE.
FRONT U/C LEG. MAKE PORT SIDE TO DOTTED LINE & ST'BD TO FULL LINE-16 SWG.
CEMENT IN PLACE AFTER CHECKING INCIDENCE.
HOW TO CHECK INCIDENCE.
1/8 SHEET
1/32 BIRCH MOTOR PEG.
1/32 PLYWOOD
1/8 SQ
SKETCH STAB. DECKING
WING INCIDENCE 5/16
1/8 HARD BALSA SHEET
1/32 SLOT TO FIT ON WING ROOT
1/8 SQ CEMENT LONGERON
1/8 VERY HARD SHEET BALSA.
CG
DOUBLE COVER FIRST THREE BAYS
COVERING LINE OF LOWER FIN COVER FUSELAGE FIRST.
1/8 SQ CENTRE ONLY.
SHADED PORTION LENGTH OF DIAGONAL BRACE
1/32 SHEET FOR COVERING PURPOSES ONLY
ATTACH FUSELAGE COVERING TO LOWER LONGERONS.
DOUBLE COVER
1/8 x 1/16
1/8 SQ
1/8 x 1/16
1/8 x 1/8
1/8 x 1/16
1/32 PLYWOOD CAP
FILL IN NO 1 BAY WITH 1/16" SHEET.
1/8 x 1/16
1/8 x 1/16 CEMENT TO UNDERSIDE OF LONGERON.
F6
F7
20 SWG HOOK
1/8 x 1/16
1/16 SHEET.
1/16 SHEET OUTLINE.
CEMENT SLIGHTLY LOWER THAN SHOWN TO OBTAIN TIGHT FIT ON WING BRACE. NOTE ANGLE
1/32 BIRCH PLYWOOD
1/16 BIRCH
BIND U/C BOX WITH No 40 THREAD BEFORE INSTALLING & COAT WITH CEMENT
1/16 SHEET
1/8 SQ
1/8 SQ CEMENT AS ARROWS INDICATE.
1/8 SQ
1/16 SQ STRIP
2 PIECES 1/32 PLYWOOD KEY PIECE MADE FROM 4 PIECES SHEET.
BALL RACE CUP WASHER SOLDER TO SHAFT
1/32 PLYWOOD
16 SWG
1/16 SHEET.
SKETCH U/C BIND & SOLDER
TWIST TO REMOVE
SIDE
PLAN
A
B
C
1/16 ROUND BIRCH PEG BALSA BLOCK.
18 SWG BRASS TUBE.
BRASS TUBE
1/32 PLYWOOD
LOWER PORTION FITS BETWEEN LONGERONS.
WHEEL 2" DIA
PATTERN U/C REAR LEG 18 SWG.
1/8 SQ DIAGONAL BRACE AT STATIONS A, B, & C.
20 SWG HOOK.
1/8 DOWEL
1/32 SHEET
1/8 SQ
S1.
S2.
S3.
S4.
S5.
S6.
S7.
S8.
1/16 SHEET
1/16 SQ
ST'BD U/C LEG IN UPPER BOX. PORT U/C LEG IN LOWER BOX.
1/32 PLYWOOD CAP CEMENT TO WHEEL AFTER SOLDERING WASHER
1/32 PLYWOOD
16 SWG BRASS TUBE.
1/8 BALSA
1/16 BALSA
TEMPORARY 1/8 x 1/4 BRACE TO OBTAIN VERTICALITY OF LOWER FIN OUTLINE. CEMENT LIGHTLY LONGERONS 1/16 BLOCK.
POWER 14 STRANDS 1/4" x 1/24" x 48" LONG OR 18 STRANDS OF 1/4" x 1/30 x 48" LONG. MAXIMUM TURNS 950. STABILISER & REAR U/C LEG FIXED WITH RUBBER BANDS. APPLY TWO COATS OF CEMENT TO ALL HIGHLY STRESSED PARTS, BEFORE BRINGING PIECES TOGETHER. AVOID GETTING CEMENT ON THE INSIDE OF WING BOXES - PUSH 1/8" SQ BALSA THROUGH DURING BUILDING PROCESS. THE WING BRACE SHOULD SLIGHTLY BRUISE THE UPPER PIECE OF 1/8" SHEET AS IT IS MOVED FOR ADJUSTMENT. C.G. IS SHOWN IN ITS CORRECT RELATION TO THE WING. THRUST LINE OFF-SET TO RIGHT & FIN TAB SET TO GIVE RIGHT HAND CIRCLE DURING GLIDE.
BALSA BLOCK.
1/4 x 1/16" T.E.
1/16 SHEET TIPS.
1/4 x 1/16 HARD BALSA.

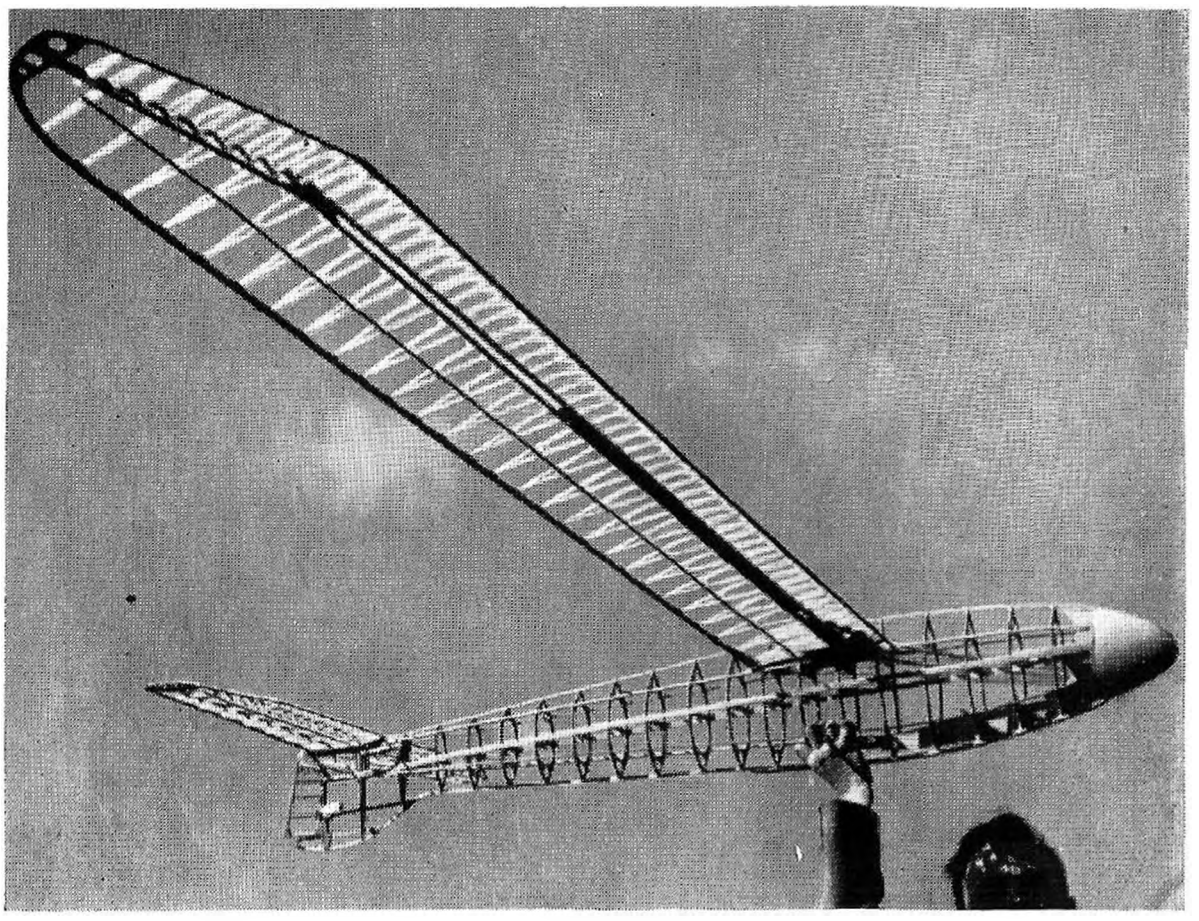

G.41. World Record Sailplane designed by Emil Glunkin, Switzerland.

DESCRIPTION.—A world record model must always be of interest if only by virtue of its *proven* ability to do something not simply better but best of all. Glunkin's model would, indeed, have been of interest even without the added laurels of a world record for it embodies a number of unusual features. First of all size : it is built to the largest accepted span for F.A.I. models, namely, 350 cms., or about 11 ft. 6 ins. This is not, of course, exceptional, for large gliders are the commonplace of continental modellers, and, in fact, rapidly gaining a following in this country, but suggests a certain confidence by the designer that he would benefit by every inch of span permitted. This large size made it possible to lay out the model on almost full-size principles—the small area of tailplane and fin will be particularly noted. No upper fin is fitted, the whole of the directional stability being achieved with an underfin of only moderate dimensions assisted by an exceptionally deep fuselage right back to the tail. This makes for added strength without structural complications. The whole design is based on simplicity. Polygonal formers are assembled about two main crutch longerons, with light stringers added top and bottom. No part of the model is sheeted, necessary nose strength being provided by a substantial block and a deep skid running back as far as the mainplane. Covering is silk. An alternative version also exists with anhedralled tips, giving a performance equal to the straight dihedral type—though it has not achieved any world records ! (*Continued on* page 92)

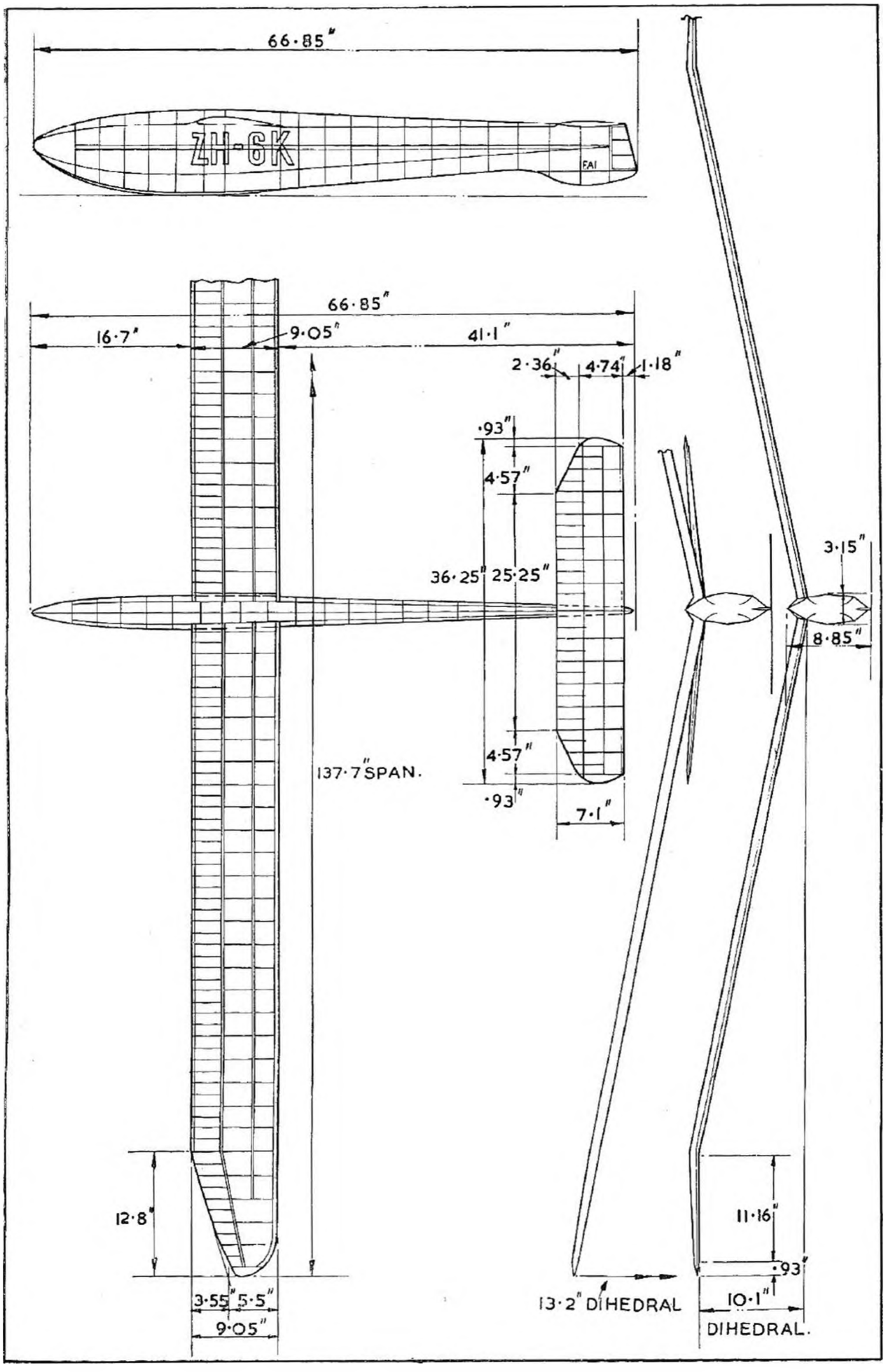
66·85"
ZH-6K
FAI
66·85"
16·7"
9·05"
41·1"
2·36"
4·74"
1·18"
·93"
4·57"
36·25"
25·25"
4·57"
·93"
7·1"
137·7" SPAN.
12·8"
3·55"
5·5"
9·05"
3·15"
8·85"
11·16"
·93"
13·2" DIHEDRAL
10·1"
DIHEDRAL.

Aeolus. Dutch Sailplane designed by P. J. Vriend.

DESCRIPTION.—Added to a natural predeliction for sailplanes, continuing shortages of such things as engines, rubber, and balsawood, have encouraged extensive development of this class of model in Holland, until we should say that an average Dutch team could beat any other average team in the world. Aeolus, the model described here, is a good average club model, capable of being built and successfully flown by anyone who has built a model or two. It has no particular frills, but combines to make a most efficient machine of simple yet wholly elegant lines. The recessed wing platform is probably one of the neatest ways of fixing a wing with low drag yet easily detachable on rough landings or for transport. The slightly swept back wings with elliptical tips combine ease of building with good appearance. The tail is mounted on top of the small fin—well out of harm's way. Several years of development have enabled the designer to incorporate strengthening fillets where they have been found necessary so that—barring loss o.o.s.—Aeolus should last indefinitely without major repairs. The fuselage is mainly of hardwood, with paper or silk covering, while wings and tailplane are a blend of balsa and hardwood to make the most of their respective characteristics. The substitution of balsa throughout should improve performance, but at the expense of strength and is not really recommended except to " pothunters " who would be content to win once and rebuild.

PERFORMANCE.—Aeolus' first public performance in this country was in 1947 when it took third place in the sailplane event at Eaton Bray with 6 : 15. Best contest times recorded in Holland are 25 : 43, 12 : 31, and 8 : 27.

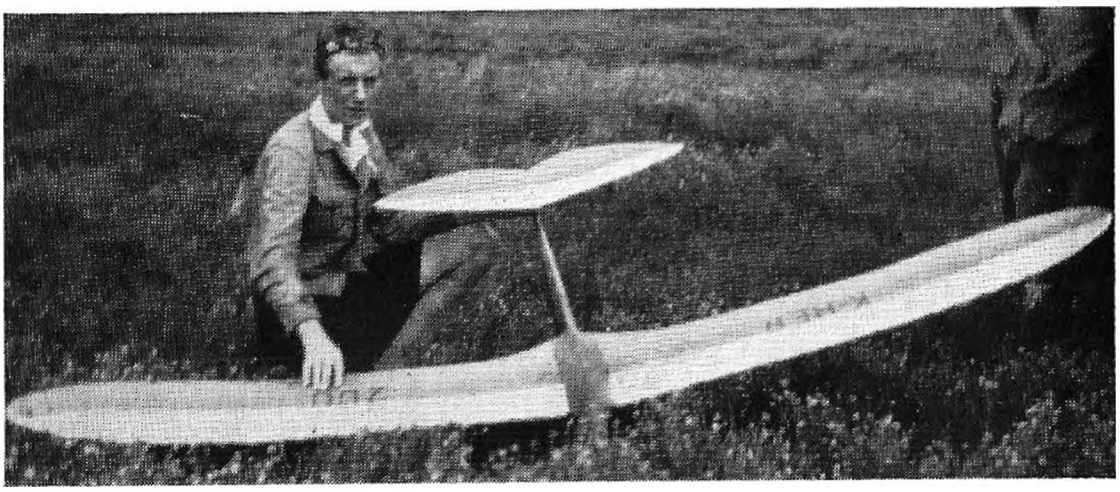

G.41. (*from* page 90) A number of examples have been built—the record breaker was, in fact, flown by the designer's Zurich clubmate, Traugott Haslach, clocking no less than 2 hours 21 minutes. F.A.I. records are, incidentally, established by *following* the model whereas our own national records must be timed without leaving the takeoff spot.

DIMENSIONS.—Span 137.7 ins. Parallel chord 9 ins. ; tapering tips. Wing area 8.33 sq. ft. Length 66.7 ins. Tailplane span 36.25ins. Parallel chord 7.1 ins. ; tapering tips. Dihedral 13.2 ins. under each tip.

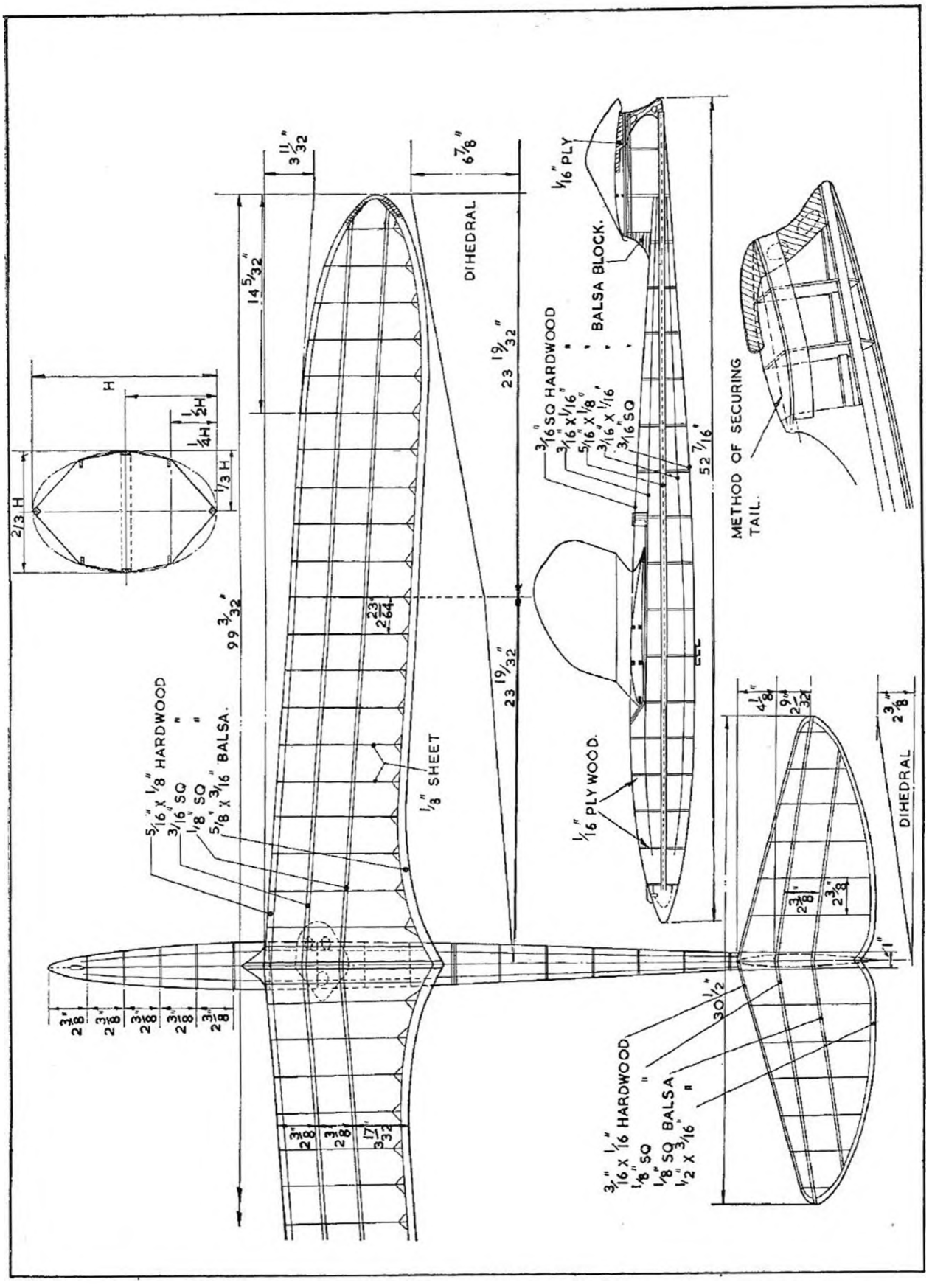

DIMENSIONS.—Span 99 ins. Parallel chord $8\frac{1}{4}$ ins. Length $52\frac{1}{2}$ ins. Tailspan $30\frac{1}{4}$ ins. Dihedral $6\frac{7}{8}$ ins. Wingsection NACA 6512. Weight 27 oz.

Spee-Dee. U.S. Control Line

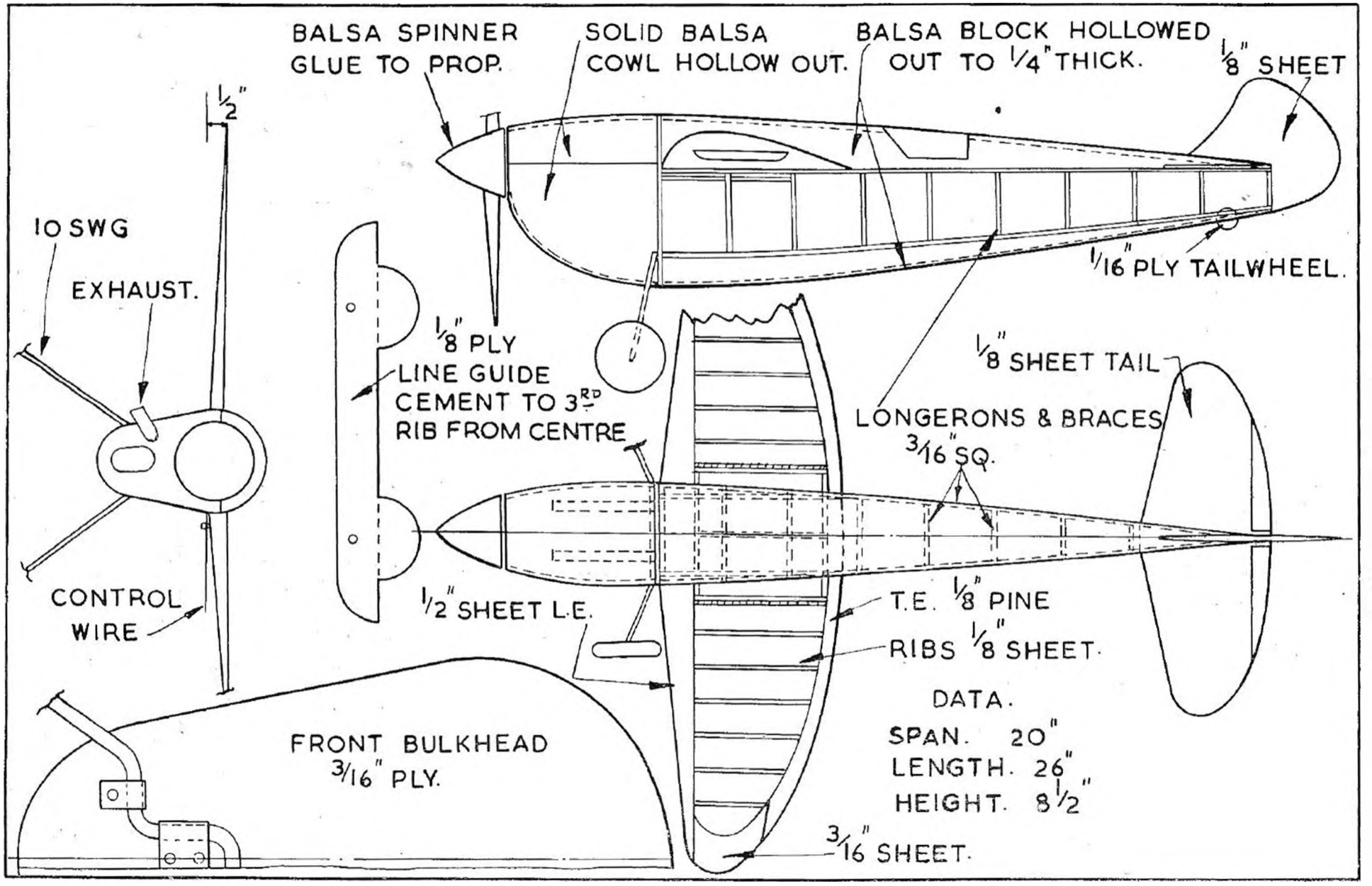

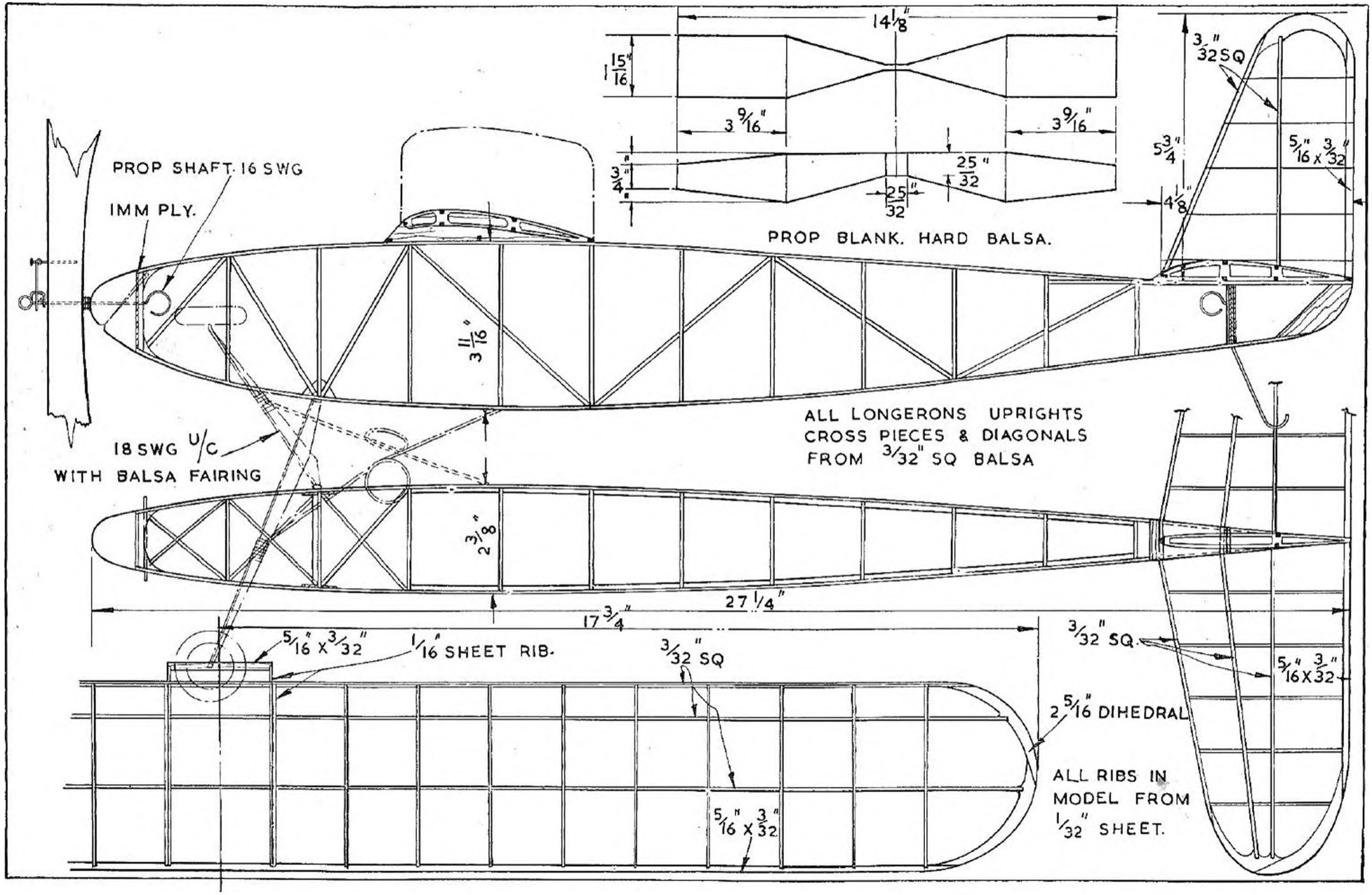

Mira. Czechoslovak Rubber Model

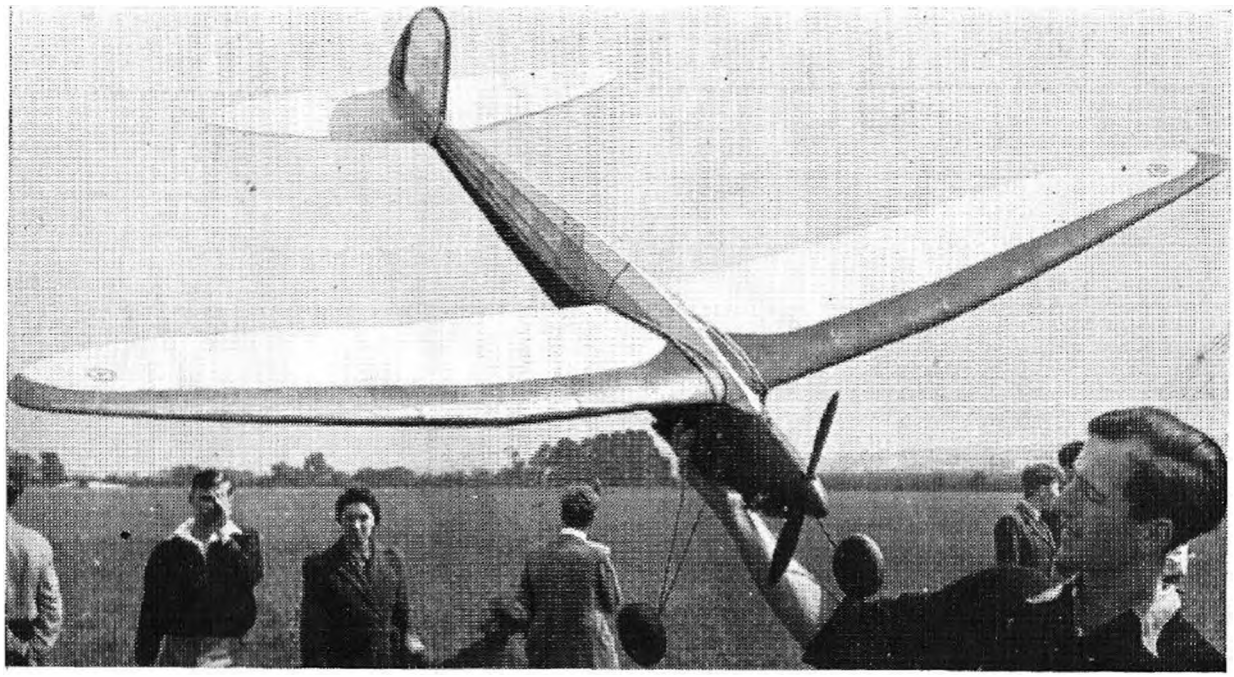

Bossu. Former World Record Power Model by P. Vaysse, France.

DESCRIPTION.—Bossu is an elegant high shoulder wing model. powered by an inverted Micro 5 c.c. diesel. Wings are very slightly polyhedralled, the inboard section lying parallel to the dihedralled tail, and then in line with the tips of this increasing the dihedral to a total of $6\frac{7}{8}$ ins. under each wing tip. Rather unusual in Continental model is use of Goldberg G5 mainplane section, such as the American master popularised with his famous Valkyrie and Sailplane models. The semi-scale appearance of Vaysse's record breaker should assure it of a popular following. It is useful to note how simply its elegant lines are achieved. The fuselage for example is polygonal—the lower half octagonal and the upper part with multi-stringers bringing it to a nearly oval shape. Mainplane is easily detachable—being the usual cut out section from the fuselage mated to the centre section, and duly sloped fore and aft for easy movement on a hard landing. Engine is neatly faired in to please even the purists. Timer, incidentally, has dual task of first cutting off engine run, then turning trim tab to the right. Normal trim tab position is neutral, ensuring power climb in spirals to the left.

PERFORMANCE.—Pierre Vaysse, the designer-flyer, finished this model in April, 1945, and went for world altitude records on June 17th, 1945. First effort with a 5 minute flight gave altitude of 1,710 m., which gave him the existing record. He tried again at about 5.30 that day and climbed to 1,810 m. with a 15 minute flight o.o.s. For the record attempts a specially large tank was fitted over the c.g., and faired in, giving a total power run of a quarter of an hour.

DIMENSIONS.—Span $82\frac{1}{2}$ ins. Overall length $48\frac{1}{2}$ ins. C.G. located $3\frac{1}{2}$ ins. back from l/e of mainplane. Mainplane incidence 3° positive. Tailplane incidence 0°. Weight $47\frac{1}{2}$ ozs.

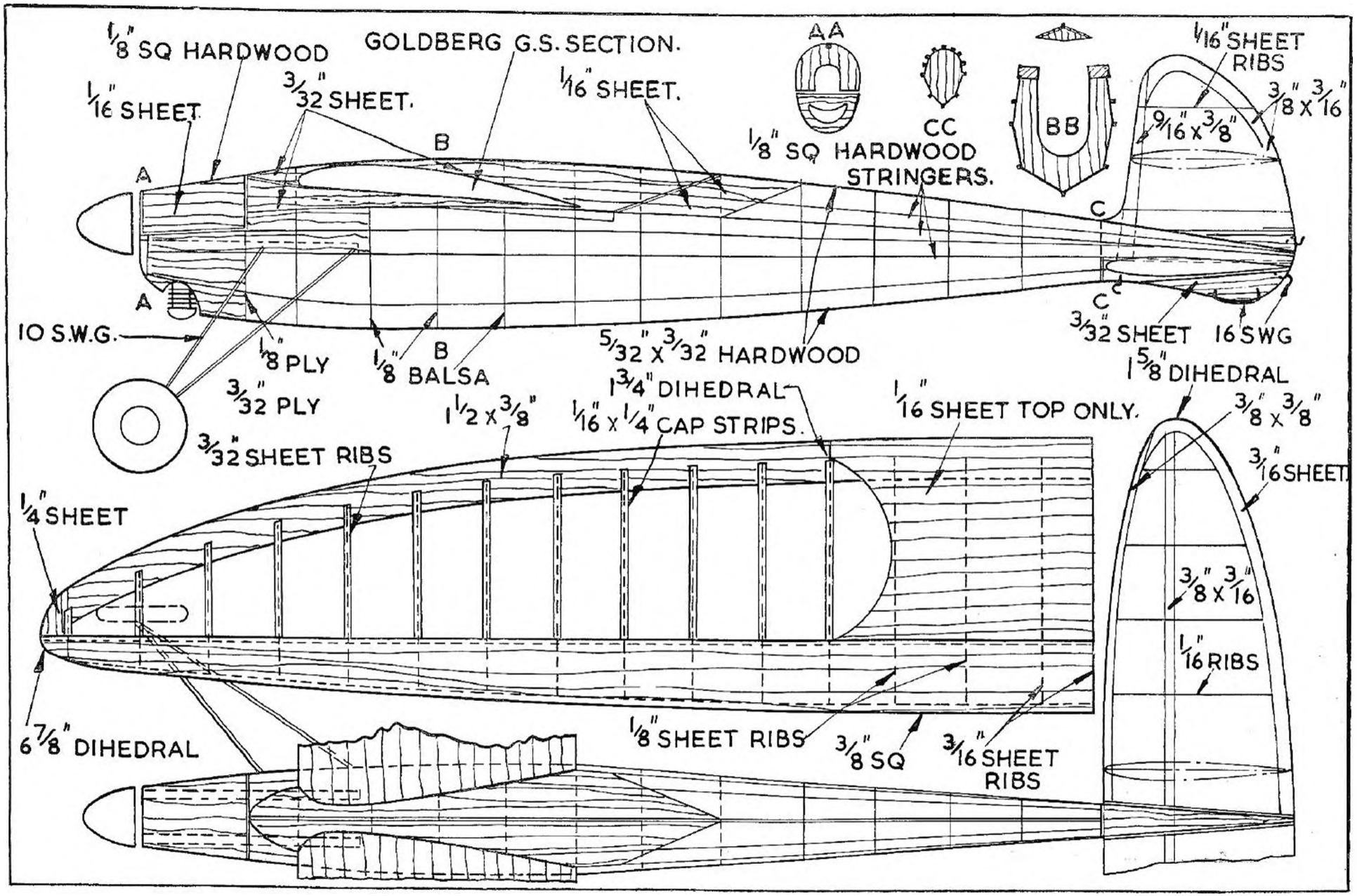
1/8" SQ HARDWOOD
GOLDBERG G.S. SECTION.
AA
1/16" SHEET RIBS
1/16" SHEET
3/32" SHEET.
1/16" SHEET.
CC
BB
3/8" X 3/16"
9/16" X 3/8"
B
1/8" SQ HARDWOOD STRINGERS.
A
C
A
C
10 S.W.G.
1/8" PLY
1/8" BALSA
B
5/32" X 3/32" HARDWOOD
3/32" SHEET
16 SWG
1 5/8" DIHEDRAL
3/32" PLY
1 1/2 X 3/8"
1 3/4" DIHEDRAL
1/16" X 1/4" CAP STRIPS.
1/16" SHEET TOP ONLY.
3/8" X 3/8"
3/32" SHEET RIBS
3/16" SHEET
1/4" SHEET
3/8" X 3/16"
1/16" RIBS
6 7/8" DIHEDRAL
1/8" SHEET RIBS
3/8" SQ
3/16" SHEET RIBS

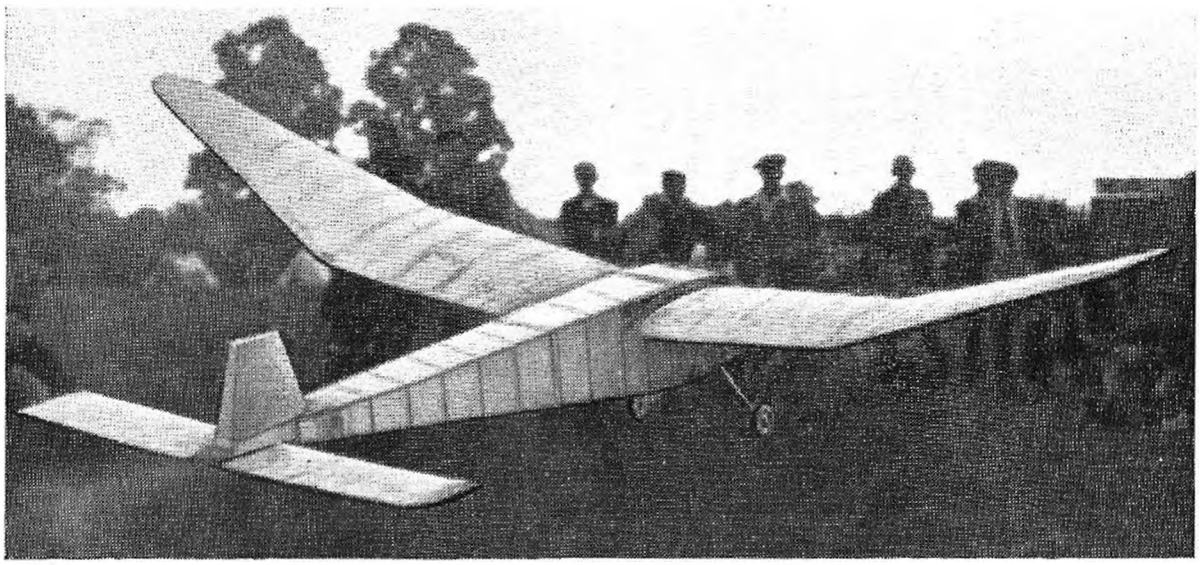

This shot shows Sysmans' model taking off from its winning flight at Eaton Bray in 1947. This may be considered a typical example of the average Belgian team power model. This type of tail unit seems to have become standardised, although earlier models had twin fins without the automatic rudder control.

Belgian Contest Power Model. Designed by Joostens and Technical Section of Belgian Model Aircraft Association.

DESCRIPTION.—The ugly Belgian contest power model has proved itself so often on the field that criticisms of its appearance no longer mean anything. It was designed for one purpose only—to be the simplest possible basic structure that, suitably powered, would go up as far as possible and take as long as possible coming down again. This, after all, is the object behind most designs, but so often obscured by following some personal fancy or popular fashion. It has had nearly six years of trials, and season by season appears with minor variations. This summer, for example, the normal undercarriage had been replaced by a tiny mono-wheel. Originally powered with spark ignition engines it now houses a Super Delmo 5 c.c. One really clever feature that appears on a number of variants is the automatic rudder control that corrects any spinning tendencies when climbing in its characteristic tight spiral. This we have successfully adapted for scale models and consider one of the best innovations of post war design. Imitation is the sincerest form of flattery, and we have heard of a French variant of the layout that has been equally successful.

PERFORMANCE.—Generally the model has shown up well at all contests, but requires skilled trimming to give of its best. At Eaton Bray in 1947 Lippens took third place with a ratio of 11.4 and Sysmans fifth with 9.8 in the first power contest. On the second outing Sysmans scored with a ratio of 28.15 to win—next best on this occasion being under ten.

DIMENSIONS.—The design has not yet been released by the Belgian Model Association and the plan has been prepared from photographs. A number of variants exist, and it is suggested that proportions be scaled up to suit engine to be fitted. With a 5 c.c. Delmo, span was approximately 45 ins.

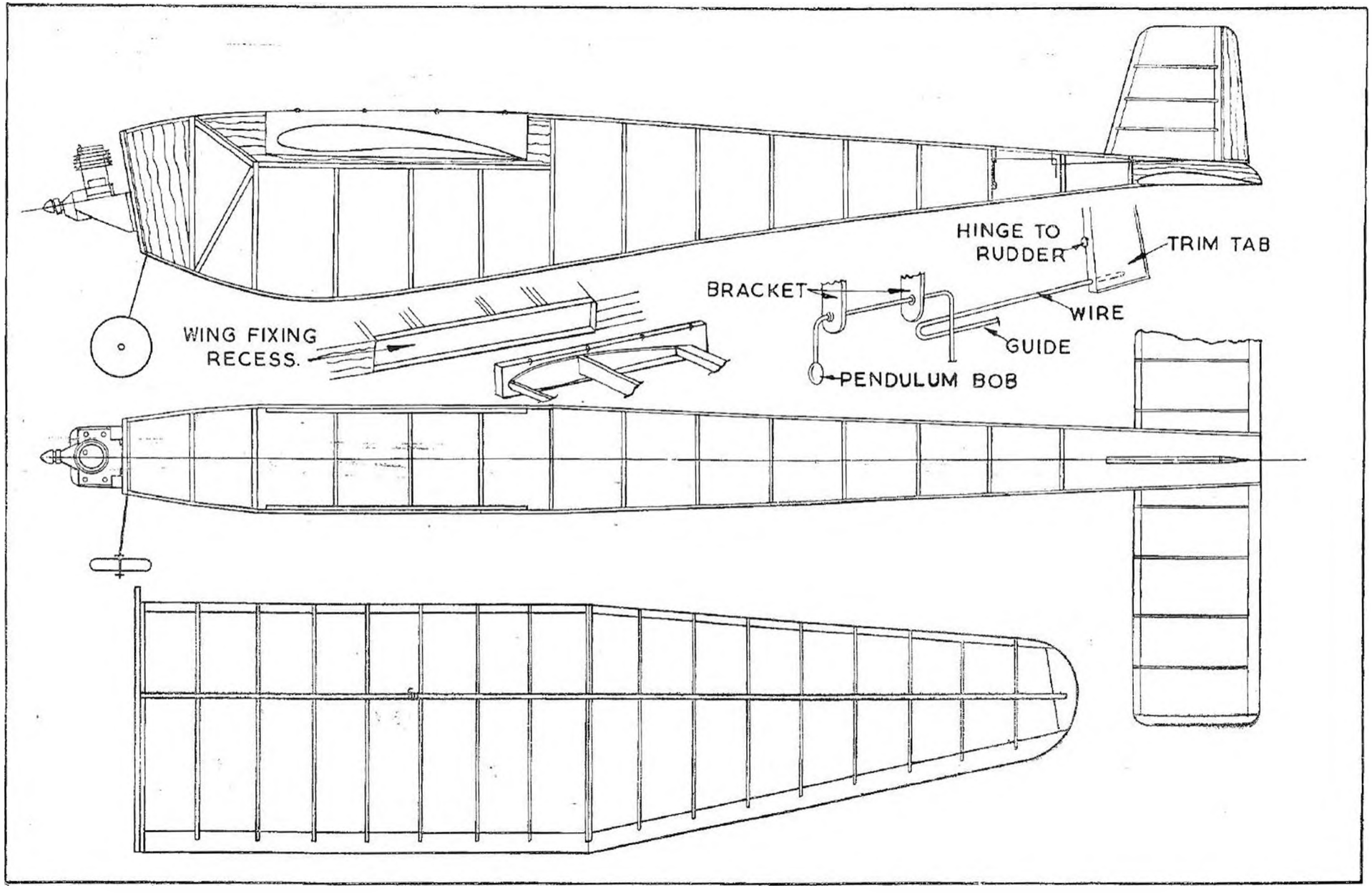
HINGE TO
RUDDER
TRIM TAB
BRACKET
WIRE
GUIDE
WING FIXING
RECESS.
PENDULUM BOB

Snowflake. U.S. Speed Control Liner.

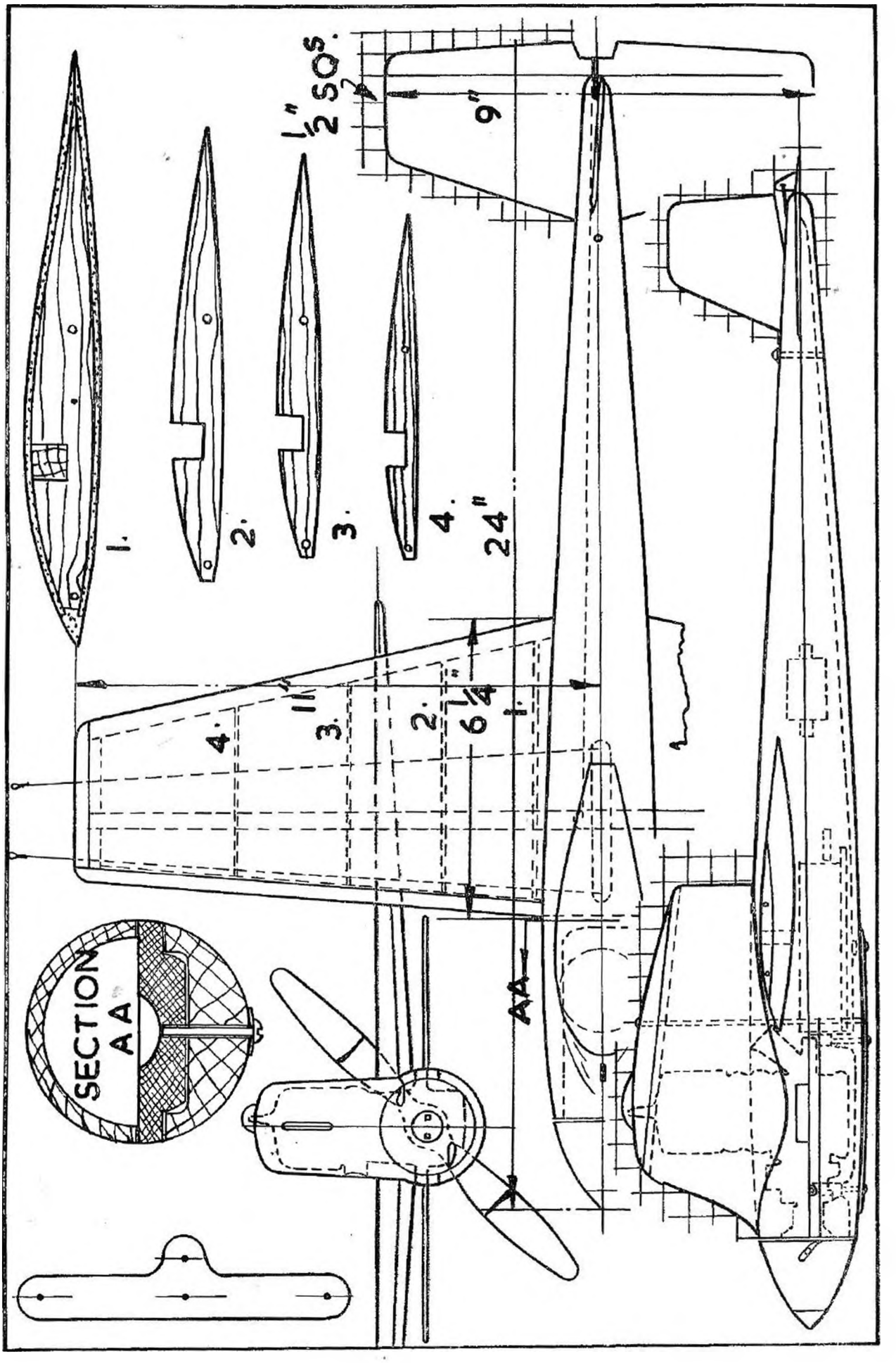

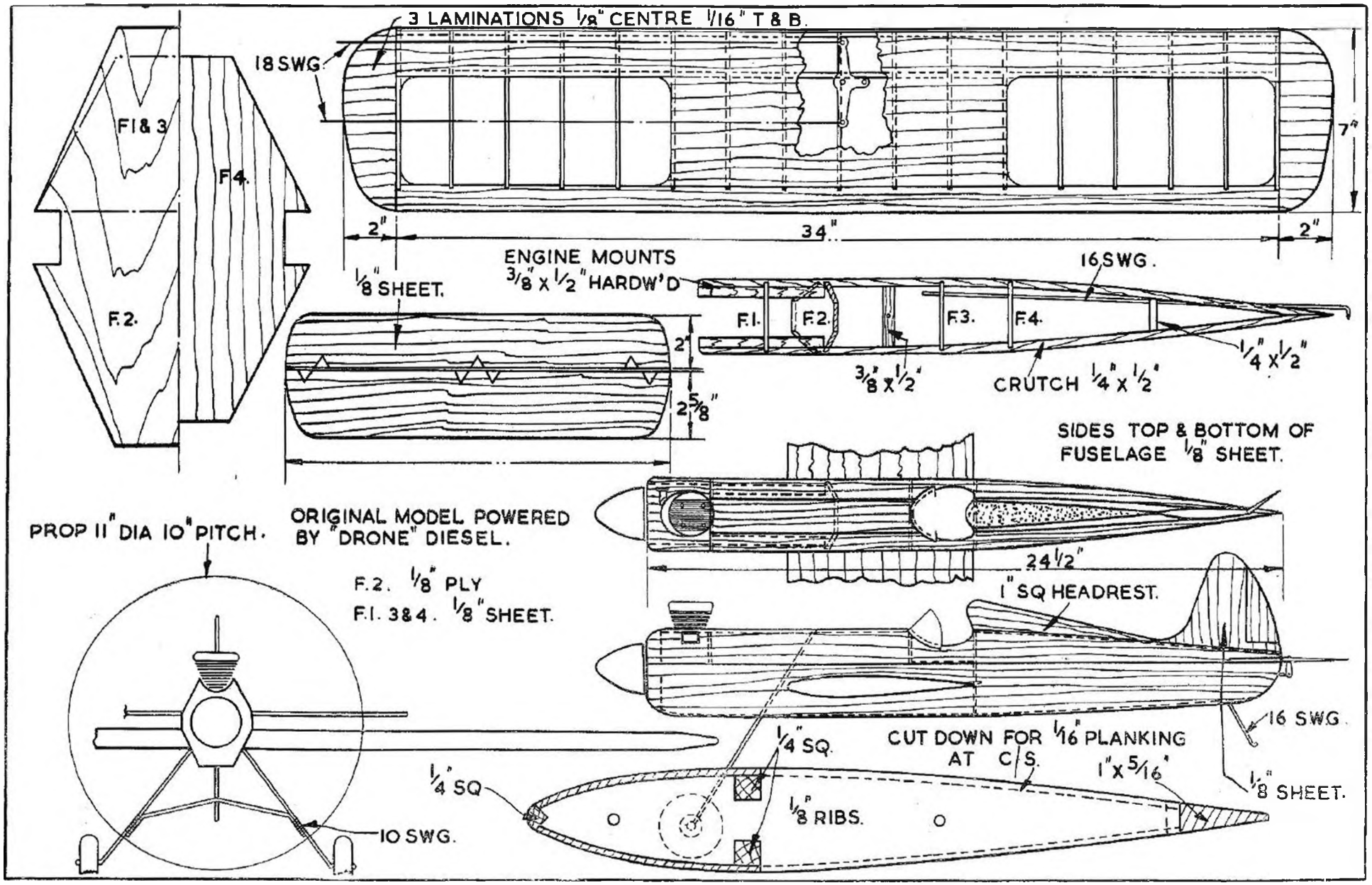

Hot Rock. Popular Stunt Control Line from U.S.

Dutch Tailless Sailplane. By W. Luxemburg.

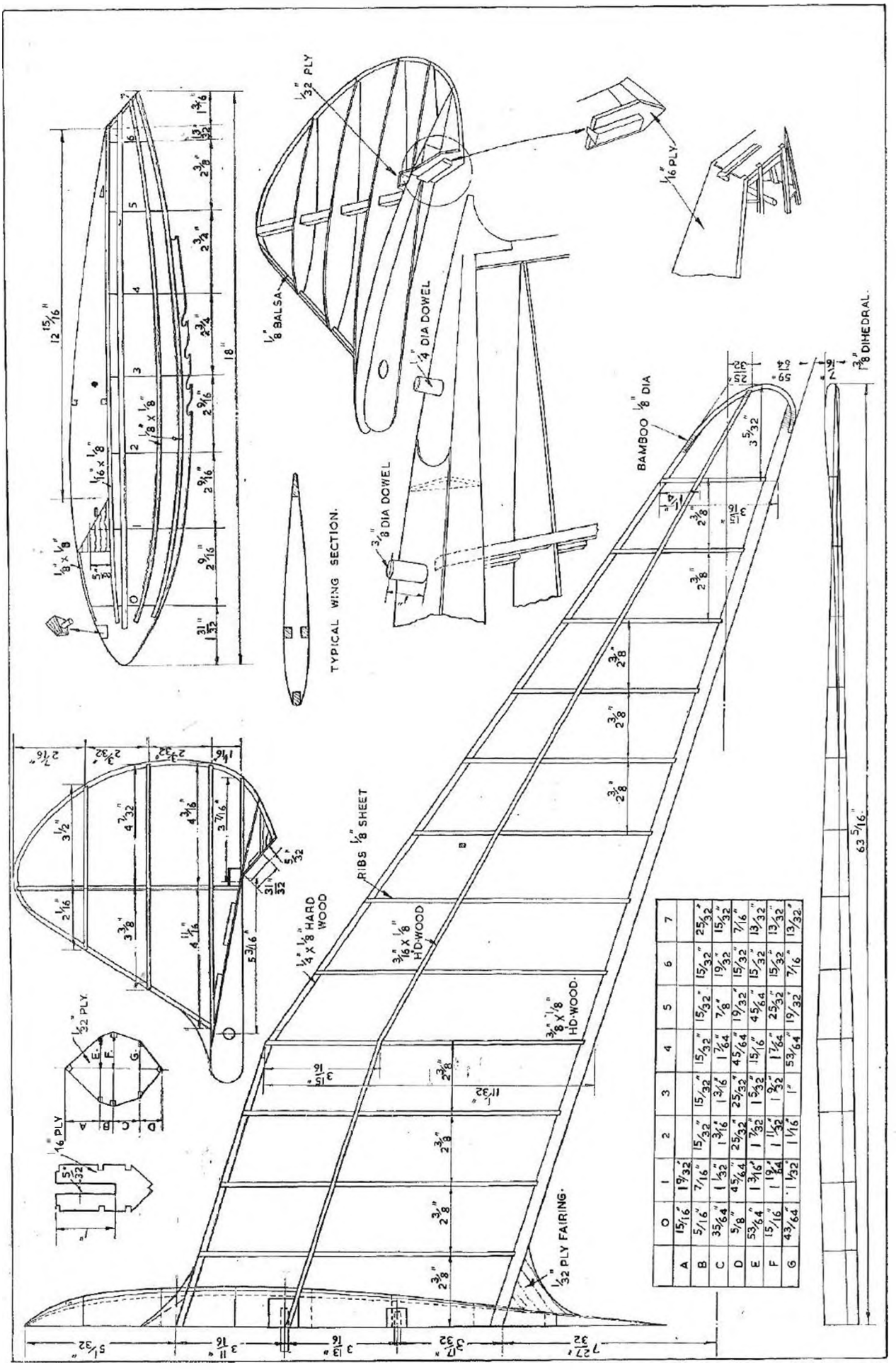

	1	2	3	4	5	6	7
A 15/16"	19/32"						
B 5/16"	7/16"	15/32"	15/32"	15/32"	15/32"	15/32"	25/32"
C 35/64"	1 1/32"	1 3/16"	1 3/16"	1 7/64"	7/8"	19/32"	15/32"
D 5/8"	45/64"	25/32"	25/32"	45/64"	19/32"	15/32"	7/16"
E 53/64"	1 3/16"	1 7/32"	1 5/32"	15/16"	45/64"	15/32"	13/32"
F 15/16"	1 19/64"	1 11/32"	1 9/32"	1 7/64"	25/32"	15/32"	13/32"
G 43/64"	1 1/32"	1 1/16"	1"	53/64"	19/32"	7/16"	13/32"

Canard Rubber Duration by A. Watteyne, Belgium.

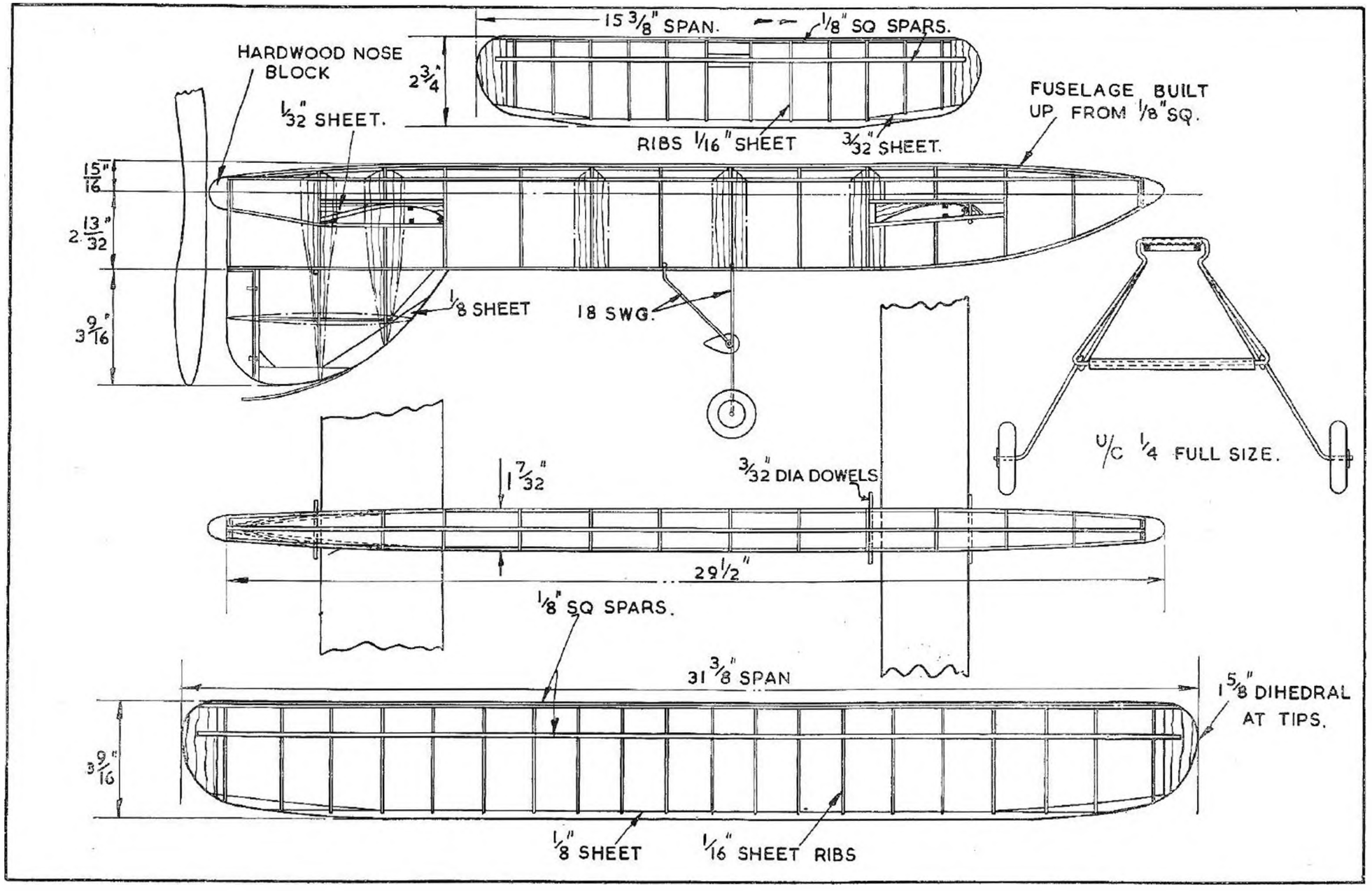

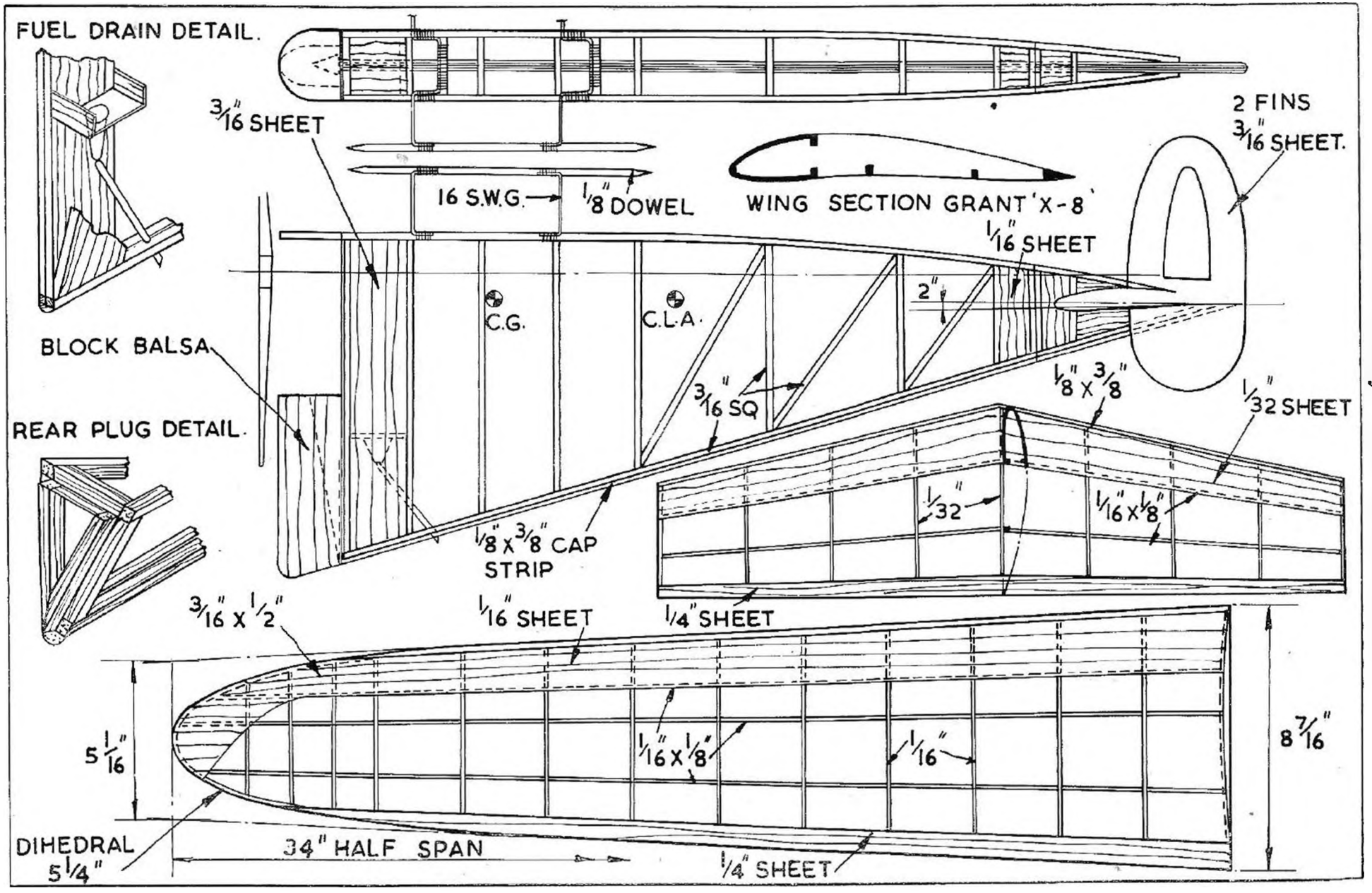

V for Victory. U.S. Power Model.

Timer's Nightmare. U.S. Pylon Power.

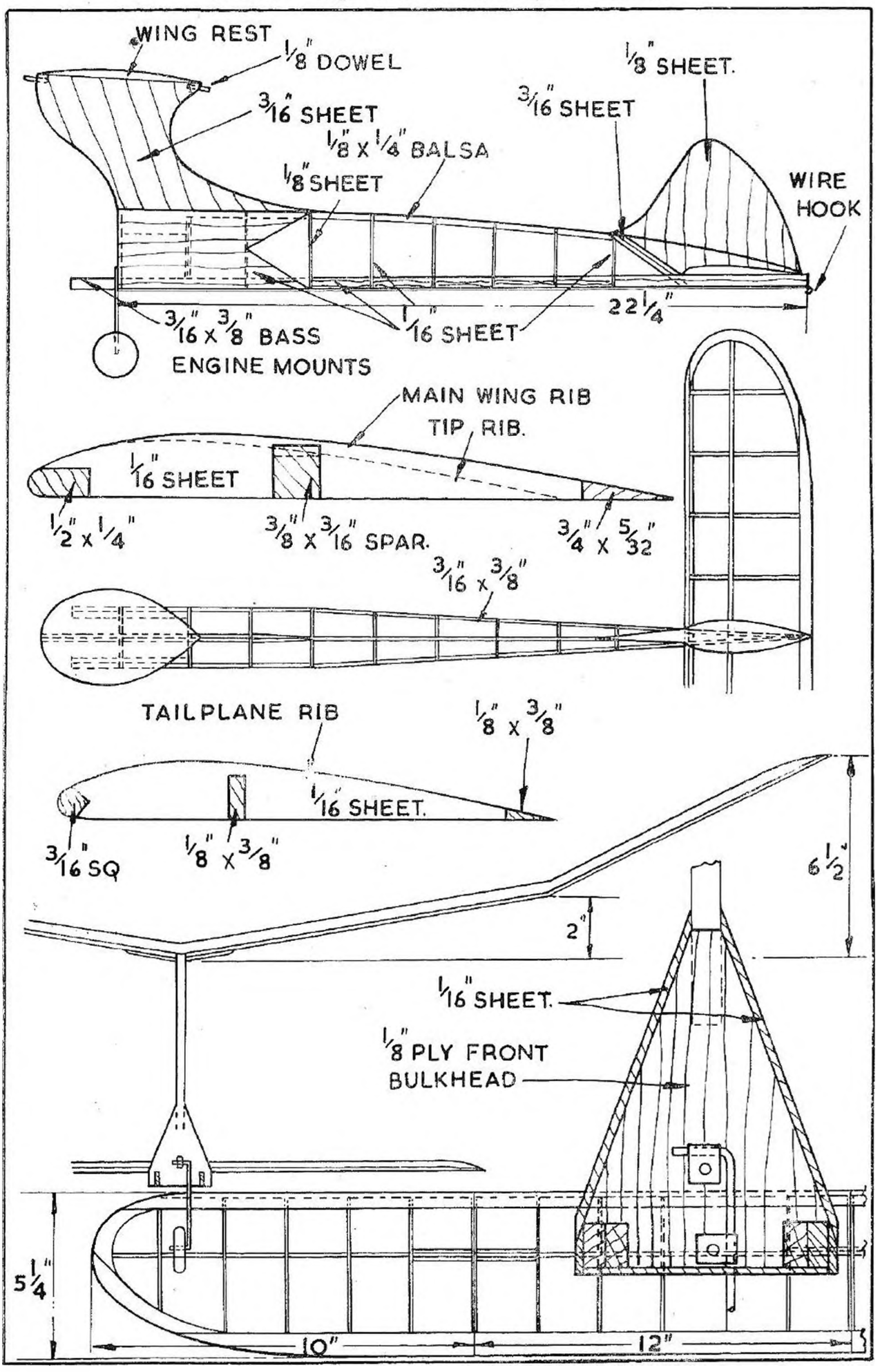

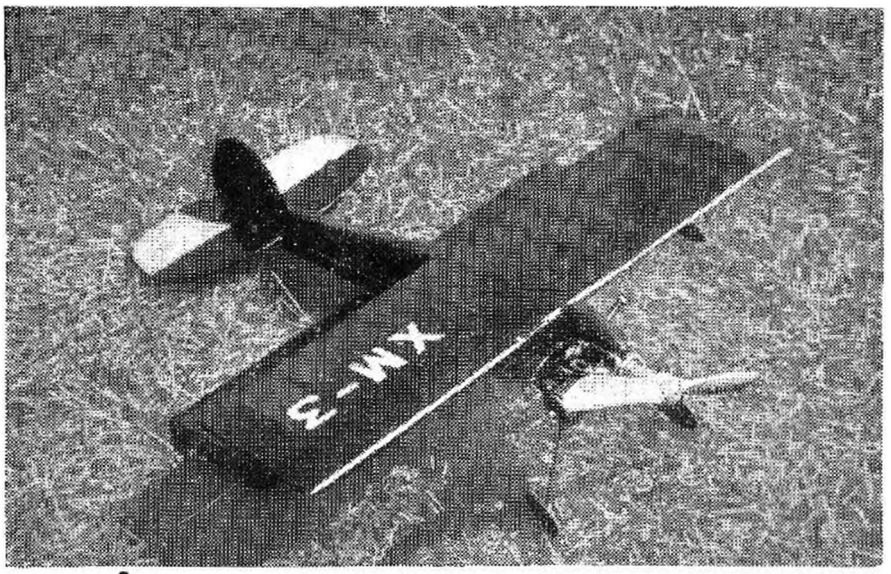

Ron Moulton's version of the deBolt Super Bipe powered with an Italian Supertigre 5.65 c.c. diesel. In his hands the model has regularly performed "all the tricks in the book."

DeBolt Super Bipe. U.S. Stunt Control Biplane.

DESCRIPTION.—The obvious approach to control line by copying the best of American designs is somewhat frustrated by the absence of engines good enough to power them on the British market. When a really successful model appears that uses a smaller motor within our power range there is ample reason for rejoicing. Such a model is the deBolt Super Bipe built round the Drone Diesel or any 5 c.c. spark ignition or diesel engine. It is a robust sidewinder biplane with symmetrical airfoil sections, well staggered wings and simple strutting. Note that upper wing has 2° *negative* incidence, lower wing is at 0°—a good arrangement where the model is to be frequently flown inverted. Tail area is ample with large split elevators joined by a wire saddle—quite a popular American style—and strengthened with a dowel edge running the full span.

DIMENSIONS.—Span 27 ins. Chord (upper) 6 ins. ; (lower) 5 ins. Overall length 25 ins. Wing area 278 sq. ins. Wing loading 16 oz./sq.ft. Weight all up 32 oz. For 5/10 c.c. engines. Airscrew 11/10 diesel ; others 7/10–8/11 ins.

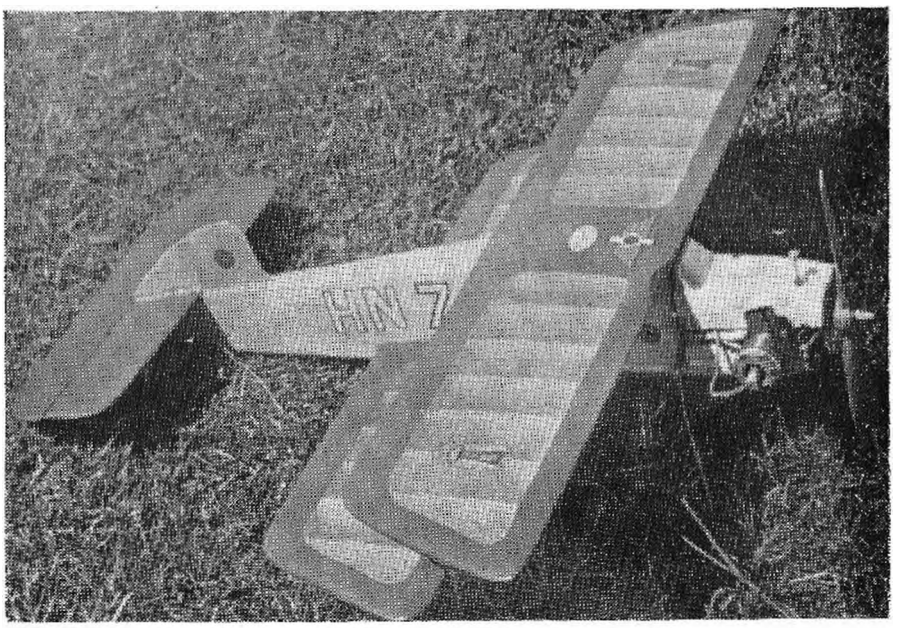

This elegant model by Henry J. Nicholls is based on the Super Bipe, though, as may be seen, a number of changes have been made. One that is not apparent is the introduction of laminar flow wing section, which has proved its worth.

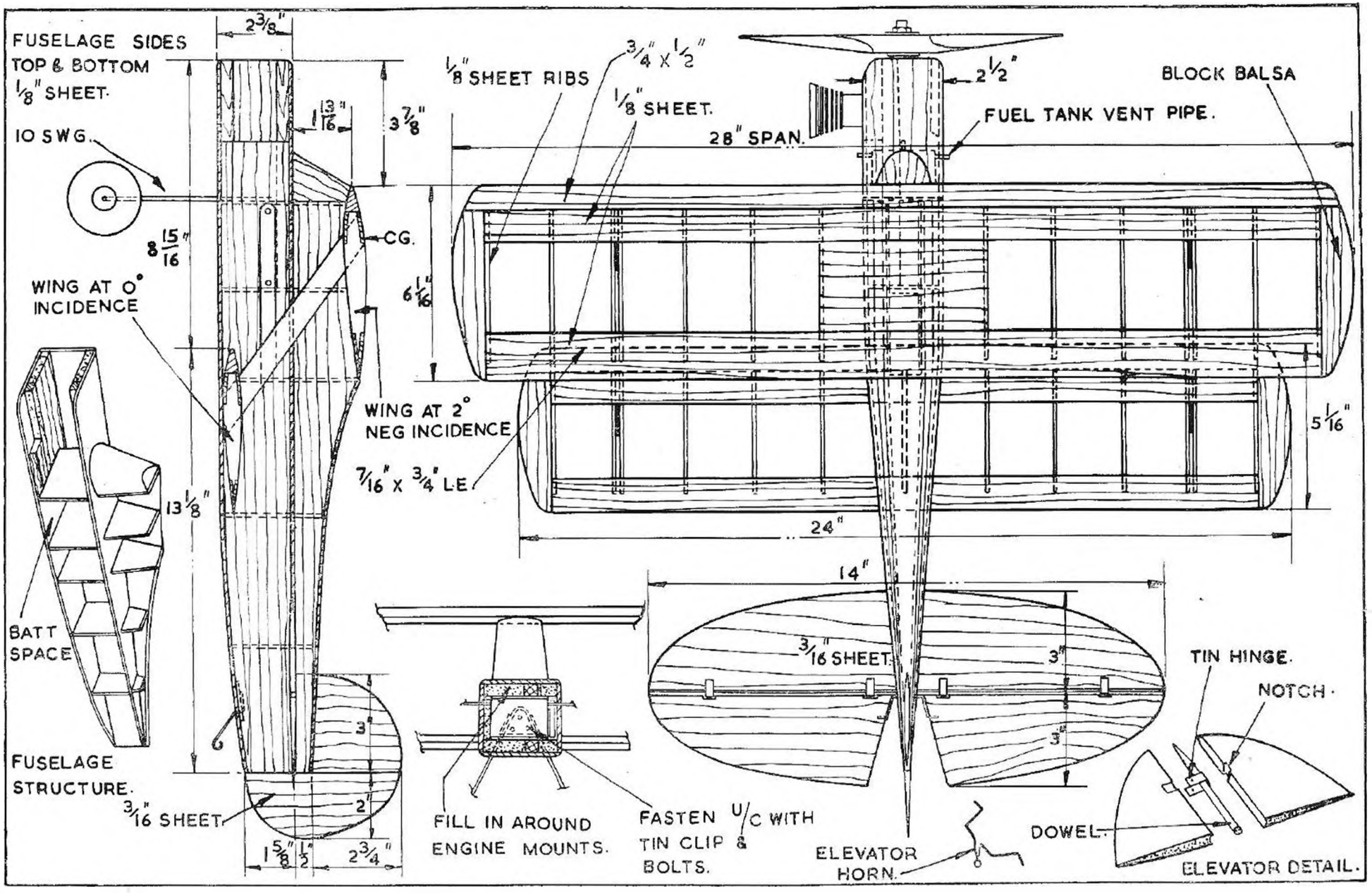
FUSELAGE SIDES
TOP & BOTTOM
1/8" SHEET.
10 SWG.
2 3/8"
1 13/16"
3 7/8"
8 15/16"
CG.
WING AT 0°
INCIDENCE
6 1/16"
WING AT 2°
NEG INCIDENCE
7/16" X 3/4" L.E.
13 1/8"
BATT
SPACE
FUSELAGE
STRUCTURE.
3/16" SHEET
3"
2"
1 5/8"
1/2"
2 3/4"
1/8" SHEET RIBS
3/4" X 1/2"
1/8" SHEET.
28" SPAN.
2 1/2"
FUEL TANK VENT PIPE.
BLOCK BALSA
5 1/16"
24"
14"
3/16" SHEET.
3"
3"
FILL IN AROUND
ENGINE MOUNTS.
FASTEN U/C WITH
TIN CLIP &
BOLTS.
ELEVATOR
HORN.
TIN HINGE.
NOTCH.
DOWEL.
ELEVATOR DETAIL.

GADGET DEPARTMENT

Engine Starting Pistol

A LOT of time has been spent thinking out a simple and portable mechanical starter for power models. The starting pistol described here, provides the answer in a simple and safe manner. It requires no special skill in construction and can be modified to suit components that may be readily available. A similar pistol was recently demonstrated to us at Eaton Bray, which worked quite well with engines of small capacity, but lacked power to turn over a larger motor where its employment would have been readily appreciated. This pistol, however, which hails from Italy, has enough punch to turn over motors up to 5 c.c. at least, and a stronger spring could easily be incorporated to turn over the largest engine in normal use.

The pistol comprises two main parts :

(*a*) The hand grip and trigger with a spring holding it in the off position.

(*b*) The prop engaging dog and spring winding mechanism.

The handle is made up of thick plywood, or any other suitable material fixed to a hardwood base, which houses the arbot bushing. It can be given a knurled finish like its more lethal counterpart or left a plain wood. An extension piece is soldered to this arbot, making a firm fixing for the pivoting bolt holding trigger in place.

The operative part consisting of a spring barrel and ratchet wheel, held normally at the off position by the spring loaded trigger, and a crosspiece with two engaging dogs for the airscrew can be made up as shown, or in many cases suitable ex-government surplus parts can be found that will obviate any fabrication.

Two methods of winding up are available. The user can simply wind up by turning the dog in the opposite direction to that required for starting, when the ratchet wheel will freely click round. Alternatively, a length of cord can be wound round the spring barrel and pulled sharply thus winding up a good store of energy. This method is to be preferred for larger size engines.

A helper then holds the model firmly and the starting pistol is applied to the airscrew, the trigger released and a good healthy swing results. Should the engine backfire, then the starter's hand will be pushed back, disengaging the dogs—and no harm done. A few hours spent making the starting pistol will be repaid by possession of an entirely practical inertia starter, and a happy freedom from cut fingers and black fingernails.

Contestants and timekeepers taking part in Power Ratio Contests will be interested in a scale just produced by Ron Warring and sold by J's Model Centre. Given flight time and motor run ratio is read off on a third scale to fair degree of accuracy in less than a second.

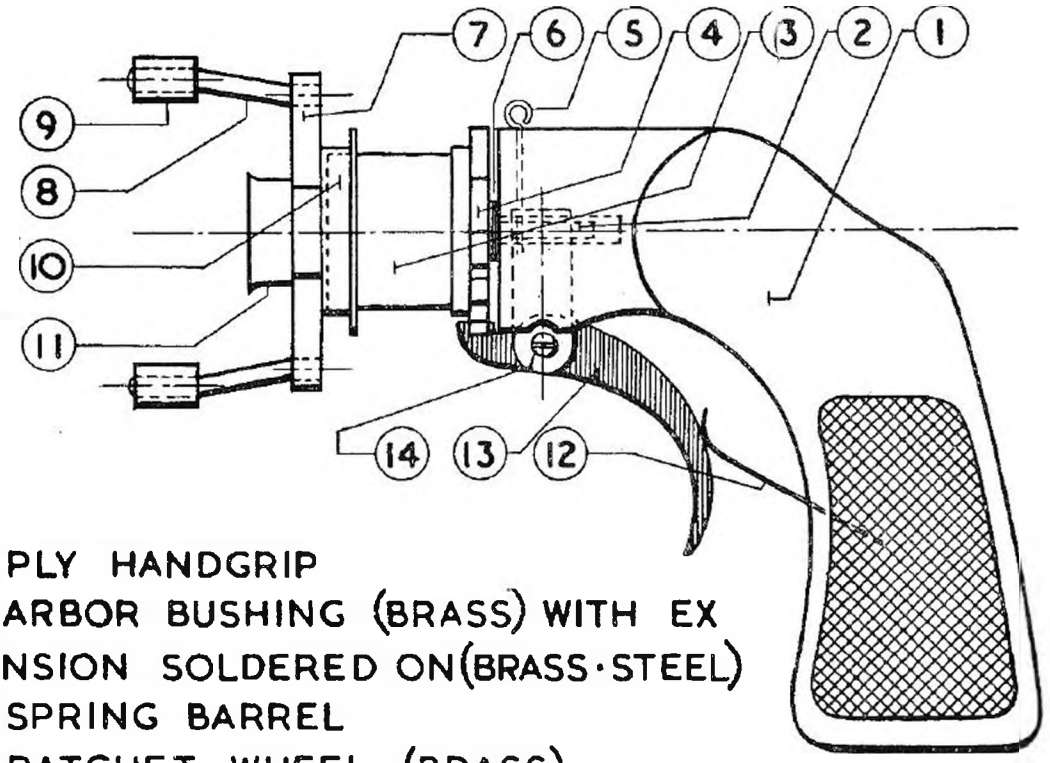

1. PLY HANDGRIP
2. ARBOR BUSHING (BRASS) WITH EX-TENSION SOLDERED ON (BRASS·STEEL)
3. SPRING BARREL
4. RATCHET WHEEL (BRASS)
5. SECURING PIN (BRASS)
6. DISTANCING COLLAR "
7. MAIN CROSS PIECE "
8. ENGAGING DOG (STEEL)
9. PROTECTIVE RUBBER TUBE
10. CAP · SPRING BARREL (BRASS)
11. CENTRING BUSH (BRASS)
12. TRIGGER SPRING (STEEL)
13. TRIGGER (STEEL)
14. FIXING BOLT (STEEL)

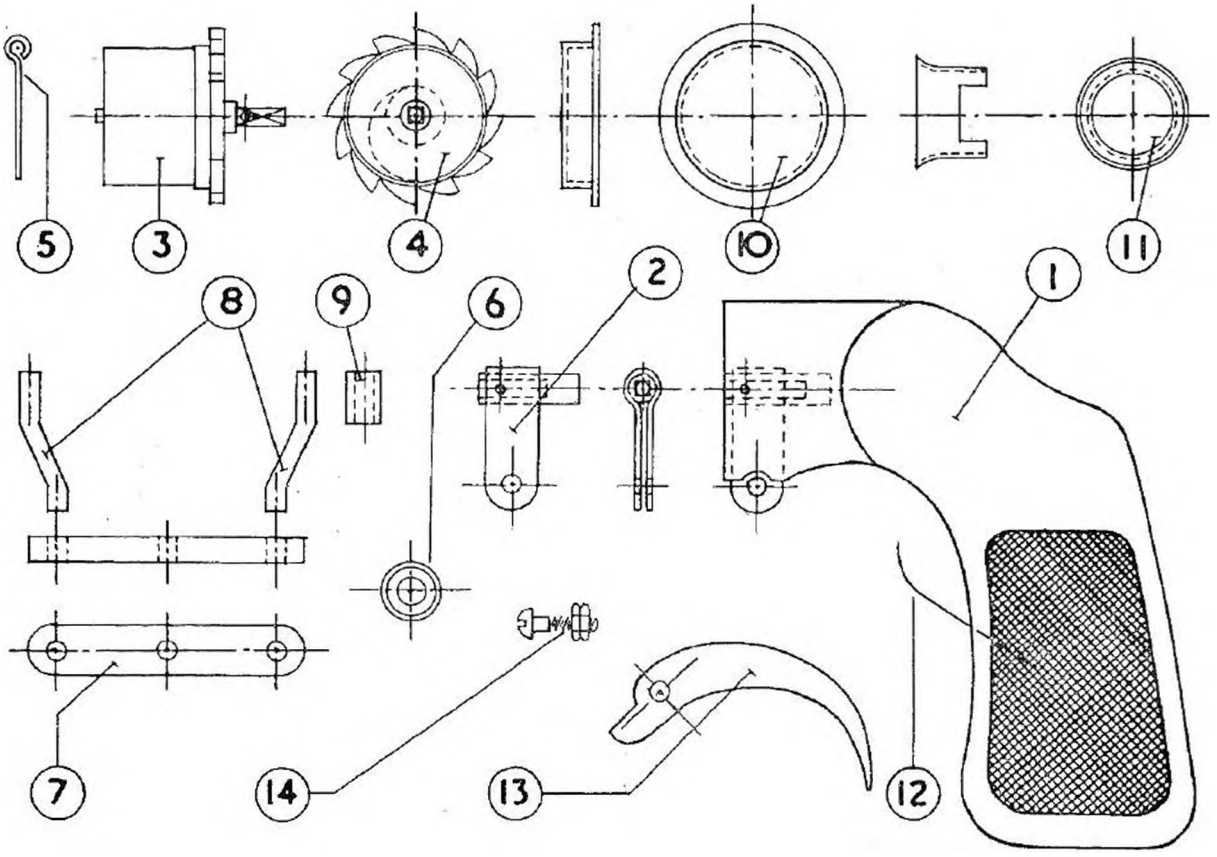

Cement Pump by E. Fillon (*from Modele Reduit d'Avion*)

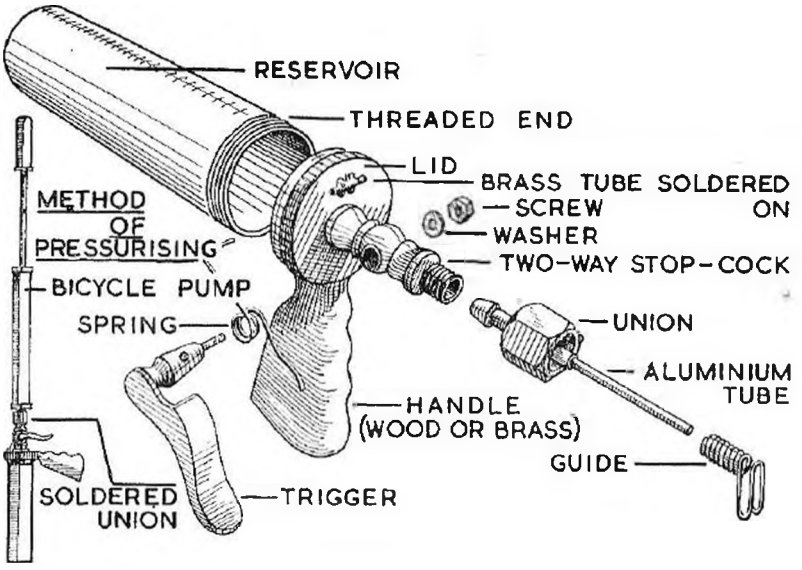

CEMENT is dear, time is precious. Why use tube cement, where the price is increased by cost of tube and its filling? Why use it from a bottle, which once opened evaporates through the large opening? One loses valuable time applying drops one by one with the aid of a little stick. The tube delivers enough to float the work when only a drop is required and then drips on the table. Building monocoque fuselages takes an infinite time, because by the time each plank is cemented the other end has started to dry.

Use instead the pressure pump which will deliver cement drop by drop just where it is needed or in a constant stream, by trigger control.

The pressure pump consists of a cylindrical brass container, with threaded end on which the lid is screwed, thus closing the reservoir. A handle is fitted with trigger delivery which opens a union a quarter turn on pressure, a suitable spring keeping it closed when not in use. Delivery is facilitated by an aluminium tube enabling cement to be applied in otherwise inaccessible places. A guide slides on the tube to assist in applying cement to sheet edges for planking and similar uses.

The reservoir is three-quarter filled with cement; the tube removed and a bicycle pump attached to the union in its place. The reservoir is then pumped up, opening the union for each push of the pump. A valve may seem an improvement, but in fact does not work out in practice, as the cement soon upsets its operation. Once pumped up the syringe is ready to deliver, under pressure, up to ten ounces of cement, that is to say, enough to build a large model without further trouble.

One important point: all parts that come in contact with the cement will be improved by nickel or chromium plating as chemical action tends to set up with the bare brass.

During work, the pump should be held upright so that the compressed air will drive a regular stream of cement through the delivery tube.

Make one of these pumps for yourself, and enjoy economy both of time and money! Shape and size of the reservoir can be adapted to modellers' individual requirements and available containers that they may find in their scrapboxes.

Simplest possible form of building jig—but not to be despised on that account. Former positions are noted from plan and hardwood jigs pinned to table. A centre line is marked on jigs and formers pinned in place or secured with elastic bands.

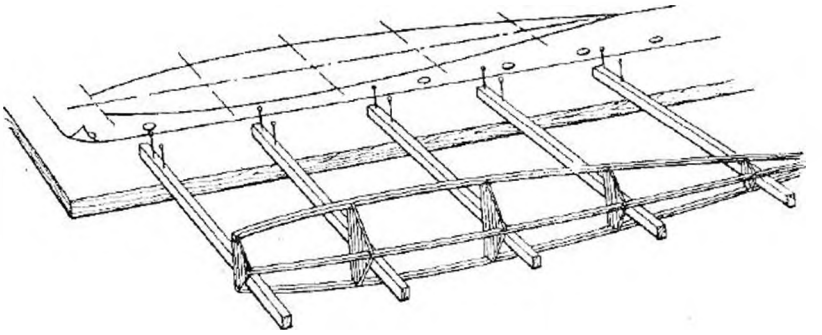

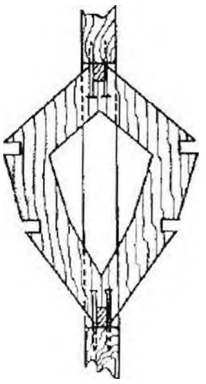

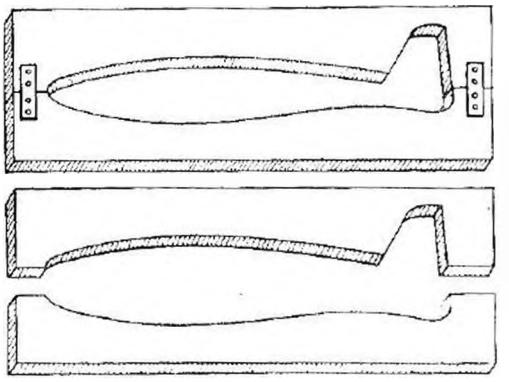

Another form of building jig. Here side elevation is cut out of wood thicker than main stringers, which are pinned in place in the thickness of the wood. A good form of jig where several models are to be built—as for example a club design.

Advanced form of building jig, patterned on fullsize practice ; this is invaluable when careful rigging is required. Once built this building frame will last indefinitely, and by fitting different keels and adjusting former retaining jigs accordingly it can be used for a variety of models.

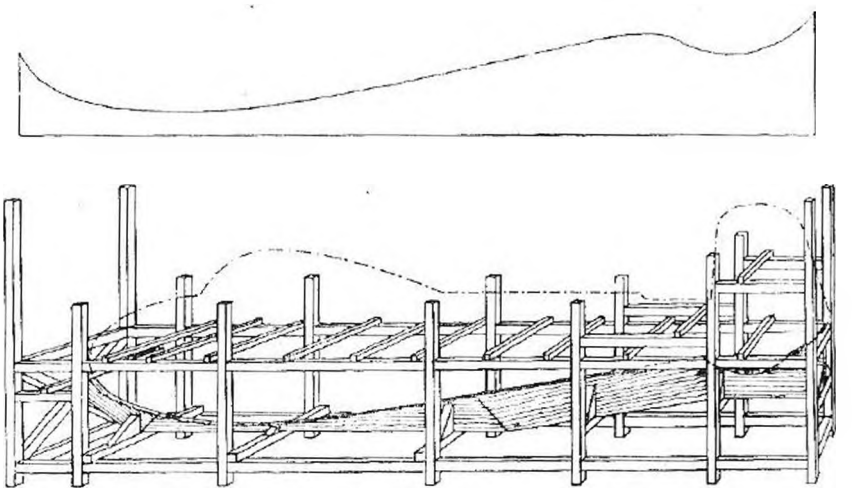

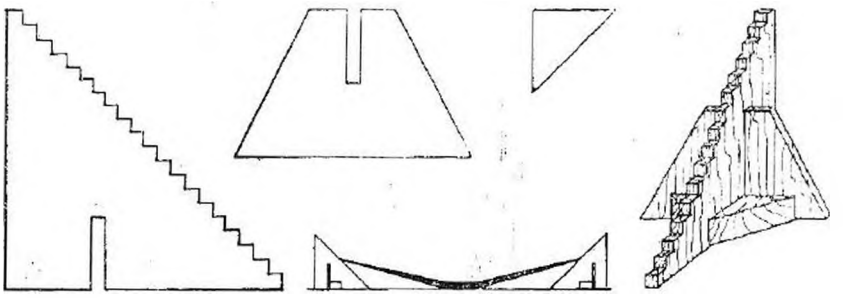

A simple, but useful accessory, aptly described by our now defunct Belgian contemporary " L'Escadrille' as a " Dihedral Ladder." Its construction and use is apparent from the drawings. Size and materials can be varied according to usual size of models made.

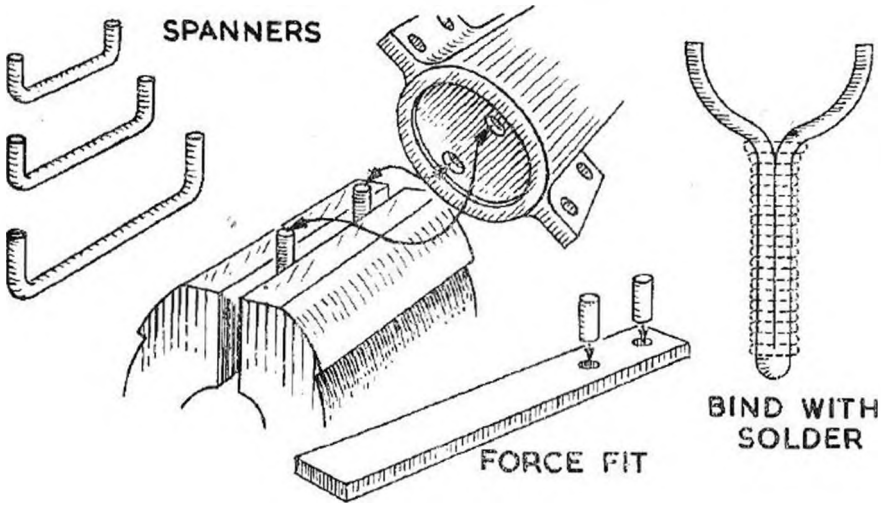

"C" Spanners are always useful but seldom if ever obtainable commercially. Bent up from suitable gauge steel wire they can be located in the vice for unscrewing such items as crankcase back cover plates and the like. A true "C" Spanner can be made by bending complete with handle, then binding and soldering the double thickness of wire. Another way is to drill a flat piece of mild steel and drive fit two small steel wire prongs.

The need for an extension drive is frequent amongst modern flying scale enthusiasts, if an ugly pot is not to stick out above or below the fuselage. The type shown here allows reasonable play, can be adapted to any length, and should not be beyond any modeller of average skill to make up with a file, hacksaw and a drill or two, sorting out suitable washers and so on from any friendly scrapbox.

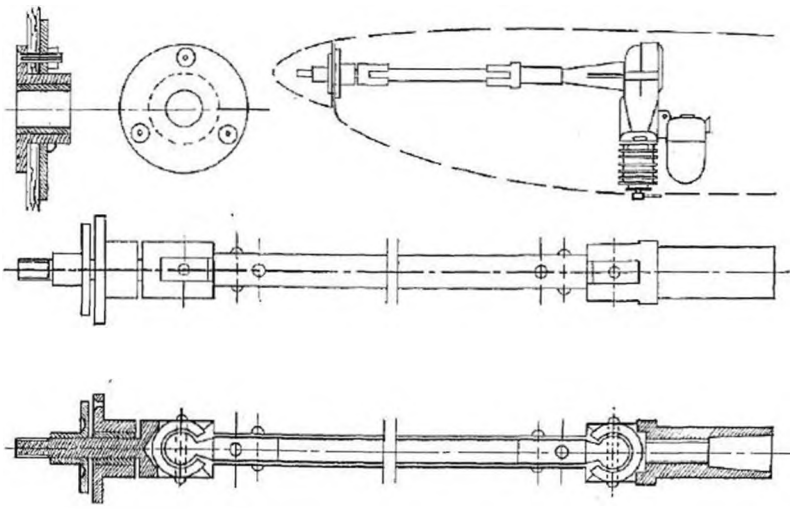

ONE - BLADE PROPELLER DETAIL

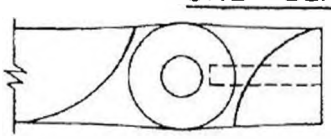

DRILL 1/8 HOLE ALMOST TO SHAFT HOLE

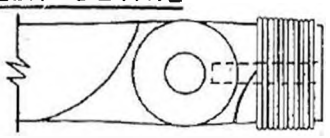

BIND WITH FINE WIRE AND TIN WITH SOLDER

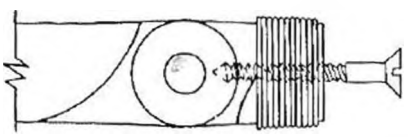

INSERT 1 1/2 WOOD SCREW

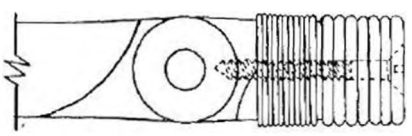

WRAP WITH SOLDER AND SMOOTH WITH HOT IRON

The advance of control line flying has put a premium on ideas for using broken airscrews. The drawings show method of fitting up a single-blader for power models. Final balance is obtained by filing the solder. They really do work, and are little trickier to start than normal two-bladers.

Popular American threaded J-bolts are now on British market offered by Warnefords. These little fellows are ideal for fixing undercarriages, mounting engines and a variety of other uses. They should receive a welcome reception—it is often the little things like this that are too much trouble to make individually, but nevertheless a boon and a blessing if obtainable ready for use for a few pence.

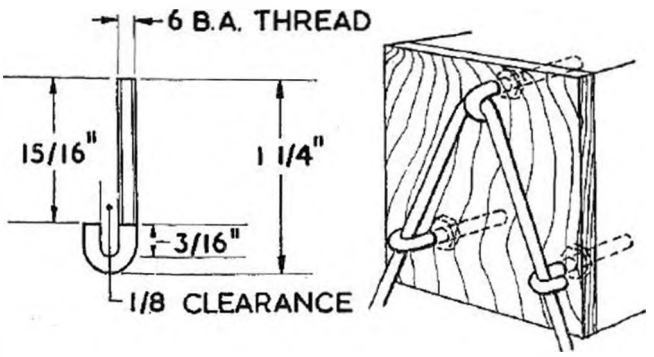

BRITISH ENGINES (1) Diesels

Make	Capacity in c.c.	Bare Wt. in ozs.	Bore in mm.	Stroke in mm.	Max. R.P.M.	Airscrew P in ins.	Airscrew D in ins.	Mounting
Ace	.5	2	...	...	5,000	4	8	Beam
Amco	.87	2	9.52	12.7	7,500	4/8	6/9	,,
Allbon	2.8	6	14.22	17.52	7,000	6/9	8/11	,,
B.M.P.	3.5	9½	...	...	6,000	6	12	Beam
Clan	.9	2¼	9.52	13.3	6,500	4	9	,,
Clansman	5.0	9½	17.52	20.57	7,200	10	12/15	,,
E.D. Mk. I	1.0	2½	11.11	10.16	7,000	4/6	6/9	,,
E.D. Mk. II	2.0	6	12.7	15.87	6,500	5/8	6/10	,,
E.D. Comp.	2.0	5½	12.7	15.87	7,500	5/11	6/10	,,
E.D. Mk. III	2.49	6½	13.97	15.87	8,500	5/11	6/11	,,
Elfin	1.8	3	...	...	10,000	4/8	8/9	Radial
Eta 5	4.99	9½	17.07	21.83	8,000	7/12	10/14	Beam
Frog 100	1.0	3¼	9.52	13.97	10,000	5/8	8/9	Radial
Frog 180	1.66	3¾	12.3	13.97	7,500	...	10	,,
Foursome	1.2	5	...	...	8,000	6	11	Beam
Jagra Dyne	3.0	7	15.87	15.87	8,000	6	12	Radial
Kemp	.2	1	5.58	7.94	12,000	2	5	Beam
Kemp	1.0	3	10	12.7	5,000	5	10	,,
Kemp	4.4	10	15.87	22.22	7,000	6	13	,,
Kalper...	.3	1	6.35	10.16	10,250	4	6	,,
Mills	1.3	4½	10.41	15.87	7,000	4/6	9/11	,,
Mills Mk. II	1.3	3½	10.41	15.87	11,000	4/6	9/11	,,
Mills 2.4	2.42	6	12.7	19.01	10,000	5	10	,,
Mills .75	.75	2	8.25	12.95	9,000	4	8	,,
Milford Mite	1.5	4¼	12.00	12.7	7,000	6	10	,,
Milford Mite III ...	1.41	4	11.75	12.7	7,000	6	9/10	,,
Masco	.8	3½	8	12.7	5,000	4	8	,,
Masco	2.8	...	13	20	7,500	6/8	12	,,
Masco	5	11	17.5	22.22	5,000	6	12/13	,,
M.E.C....	1.1	3	...	...	7,000	4/6	9	,,
Owat	5	11	17	21.75	5,000	9	14	,,
Reeves	3.4	6½	14.5	19.28	7,000	6/8	11/13	,,
Weston	3.5	6½	...	...	8,500	6	13	,,
Weston	5	8	...	...	7,000	5/10	10/15	,,
Wildcat II	5	9¼	17.52	22.22	7,000	6	12/13	,,

BRITISH ENGINES (2) Spark Ignition

Falcon I	5.0	8	19.01	17.52	5,000	8	12	Beam
Frog 175	1.75	6	12.70	13.97	6,000	5	9	Radial
Lapwing	10	13	24.13	21.75	5,500	9	14	Bm./Rad.
Mechanair	5.9	8½	19.01	19.01	5,000	6	11	Beam
Nordec	10	12½	23.70	22.22	12,500			,,
Stentor	6	11¼	19	21	5,500	8	13	,,
Reeves	6	8½	19.01	19.01	4,500	6	11	,,

The engines shown above represent those on which reasonable data is available and which are, have been, or there is good expectation soon will be, on the market. Manufacturers whose products have been omitted for lack of data are reminded that all known firms were circularised with a request for information.

A number of new glowplug engines have also been announced, either new engines, or modifications of existing designs. Most spark ignition and nearly all diesel engines with a modified head can be used for glowplug operation. Some makes (e.g., E.D. Mk. III) include conversion head with standard engine.

AMERICAN ENGINES (1) Spark Ignition

Make	Capacity in c.c.	Bare Wt. in oz.	Bore in mm.	Stroke in mm.	Compresn. Ratio	Max. R.P.M.	Airscrew P in ins.	Airscrew D in ins.	Mounting
Arden 099	1.621	2½	12.57	13.36	9:1	10,000	4	8	Radial
Arden 199	3.243	4¼	16.12	15.87	9:1	10,000	8	7	,,
Air-O-Mighty Midget	7.387	7¼	22.22	14.47	8:1	12,400	9	9	,,
Anderson Spitfire ...	9.893	12	23.79	22.22	6:1	10,000	8	13	Beam
Atomic	9.893	13	23.79	22.2	13:1	18,000	12	10	,,
Bantam	3.26	3¼	16.66	14.98	8:1	11,300	6/8	9/10	,,
Bullet	4.52	6½	19.05	15.87	9:1	8,500	6/8	9/11	,,
Brown Jr. B. ...	9.851	7½	22.22	25.4	6½:1	5,200	8	14	,,
Ball B.C.	9.893	15	23.46	22.86	10:1	20,000	12	9	,,
Barker	9.893	11	23.79	22.22	8:1	15,000	6/8	10/14	,,
Cobey Waiste ...	2.407	3½	14.27	15.06	4½:1	8,500	4	9	Bm./Rad.
Cameron 23 ...	3.767	5¾	15.87	19.05	7:1	9,000	5	10	,,
Cannon 300 ...	4.898	6½	14.47	17.22	...	5.000	8	14	Beam
Cannon 358 ...	5.880	6½	14.47	20.62	...	5,500	8	14	,,
Contestor D ...	9.762	11	24	21.59	...	14,000	8	14	,,
Condor 60	9.838	7¾	24.38	23.81	...	14,000	8	14	,,
De Long 30 ...	4.914	8	14.47	17.27	10:1	8,000	8/9	9/10	,,
Dennymite ...	9.386	11	22.86	22.86	5½:1	6,800	8	13/14	,,
Dooling 61	9.943	14	25.78	19.05	9½:1	16,000	9/10	8/9	,,
Elf Single ...	1.588	3	11.88	14.32	7:1	8,000	5/6	8/9	,,
Elf Twin	3.194	5	11.88	14.32	7:1	8,100	6	9	Radial
Everson 29 ...	4.75	7¾	17.44	19.83	8:1	8,000	8	11	Beam
Elf Four	6.372	9	11.88	14.32	7:1	8,000	5/7	13	Radial
Foster 29	4.865	6½	14.47	17.66	9:1	7,200	6/8	9/10	Bm./Rad.
Fox	9.713	9½	23.79	21.84	6:1	10,000	8/10	10/14	Beam
Fleetwind	9.893	11½	23.79	22.22	6:1	8,400	8	12	,,
Genie 29	4.783	4¼	20.62	14.27	6:1	10,800	6	10	,,
GHQ	8.485	10	23.85	19.05	8:1	7,000	8	14	,,
Husky Jnr.... ...	3.26	3½	16.2	15.87	5¾:1	7,000	4	9	
Hurricane Super ...	3.996	5¼	17.44	16.66	5¾:1	9,000	...	11	
Hornet 60A ...	9.893	14	23.79	22.22	12:1	15,000	12	9	,,
Howler	9.893	13½	23.79	22.22	12:1	11,000	10	9	,,
Hassad	9.913	18	22.98	23.87	13¾:1	19,900	12/14	9	,,
Judco Ram ...	4.783	4½	20.62	14.27	3½:1	6,800	5/6	11	Beam
Junior 60	9.893	9½	23.79	22.22	8:1	8,000	8/10	12	,,
K & B 24 ...	4.079	7	16.81	18.38	7:1	8,750	6/8	10	Bm./Rad.
K & B Torpedo ...	4.898	7½	18.41	18.38	7:1	10,800	6/10	8/11	,,
Ken 610	9.893	15½	23.79	22.22	...	14,000	8/10	12	Beam
Marvin Jr.	2.293	5	14.27	14.27	7:1	8,500	3/6	8/9	Bm./Rad.
Merlin	3.8	6	17.44	15.87	6:1	7,000	8	10	Beam
Melcraft	4.702	6	19.45	15.87	7:1	10,000	4/6	10/11	,,
McCoy 29	4.850	7	16.51	17.01	7:1	14,000	8	9	,,
Mohawk Chief ...	4.898	7	19.3	16.76			6	11	,,
Madewell 49 ...	7.993	9	22.63	19.88	5¼:1	15,000	6/10	9/13	,,
McCoy Redhead Jr.	8.042	10	22.60	20.06	7½:1	14,000	9	10	,,

AMERICAN ENGINES (1) Spark Ignition—*Contd.*

Make	Capacity in c.c.	Bare Wt. in oz.	Bore in mm.	Stroke in mm.	Compresn. Ratio	Max. R.P.M.	Airscrew P in ins.	Airscrew D in ins.	Mounting
McCoy	9.943	14	23.87	22.22	8:1	14,400	10	9	Beam ,,
Ohlsson 19	3.226	4	17.44	13.48		7,000	5	6/9	Bm./Rad.
Ohlsson 23	3.8	4¼	17.44	15.87	6:1	7,500	6	10	,,
Ohlsson 60	9.893	9	23.79	22.22	6:1	7,500	6	14	,,
O K 29	4.898	5½	19.30	16.76	6:1	9,000	6	11	,,
O K Super 60 ...	9.893	12	22.86	24.13	6:1	8,750	6	14	Beam
O K Special ...	9.893	10	22.86	24.13	6:1	5,675	10	14	Bm./Rad.
Perky	3.129	3	15.47	16.66	5:1	7,000	4	9	,,
Phantom P30 ...	4.881	7¾	18.05	14.47	5¾:1	8,500	8	11	Beam
Pacemaker 59 ...	9.733	12	23.62	22.22	...	15,000	10	10	,,
Rogers 29	4.783	4¾	20.62	14.27	...	10,300	6/7	10/11	,,
Rogers 35	5.702	4¾	22.55	14.27	...	7,500	7/9	11/13	,,
Rocket	7.436	9	20.77	22.22	...	...	8	14	,,
Super Atom ...	1.605	2	12.70	12.70	5:1	...	6/7	9/10	,,
Stenmoor	6.895	9½	20.62	20.62	8:1	10,000	8	11	,,
Super Cyclone ...	9.893	9½	23.01	23.79	6:1	9,000	6/10	12/14	,,
Scout Twin... ...	9.893	11	18.79	17.83	7:1	9,200	8	10	,,
Thor	4.783	4½	20.62	14.27	9:1	8,000	6/8	10/12	,,
Torpedo Special ...	4.881	7¾	18.05	14.27	11:1	9,500	6/8	9/12	,,
Vivell 35	5.749	7¼	19.43	19.38	...	8,000	6	11	,,
Vivell 49	8.010	7½	21.81	21.43	...	10,000	8	11	,,
Vivell Twin ...	9.32	14	18.44	17.44	...	9,000	6	12	Radial
Wensen	5.88	6	19.05	20.62	5½:1	6,200	...	12	Beam
Wasp Twin... ...	9.893	9½	18.79	17.83	7:1	10,000	10	10/11	,,

AMERICAN ENGINES (2) Diesels

Air-O-Diesel ...	4.554	7	17.44	19.05	Varbl.	7,000	6/10	10/12	Beam
De Long	4.832	10	17.27	20.62	,,	...	8	11	,,
Drone	4.848	10	16.66	22.22	18:1	8,400	6/8	10/14	,,
Deezil	2.047	5	12.01	17.98	Varbl.	8,000	10	8	,,
C.I.E.	2.408	5½	12.70	19.05	,,	6,000	6	9	Radial
Edco	7.373	14½	...	...	...	...	8	12	Beam
Mite	1.605	2½	12.7	12.7	Varbl.	9,000	8	8	,,
Micro Diesel ...	2.13	5½	...	...	...	...	...	6/8	...
Speed Demon ...	4.848	10½	16.66	22.22	12/20:1	7,500	8	11	...

This list is not offered as a complete range of American Engines, but as a representative selection on which reasonably full and reliable data is available. We are indebted to the Argentine Civil Aviation Ministry for much of the information quoted.

Glowplug—or hotwire—engines have not been separately listed. A number of manufacturers have produced special engines for use with glowplugs (e.g., McCoy Sportsman Junior and Senior), but the majority are merely modified spark ignition models. Practically all spark ignition engines can be adapted for successful glowplug use provided there is a reasonably high compression ratio, say 8:1 and upwards, though certain engines will perform with lower C.R.

SPEED TABLE—QUARTER-MILE DISTANCE

Time secs.	Speed m.p.h.	Time secs.	Speed m.p.h.	Time secs.	Speed m.p.h.	Time secs.	Speed m.p.h.	Time secs.	Speed m.p.h.
6.0	150.0	11.0	81.83	16.0	56.25	21.0	42.86	26.0	34.61
6.1	147.5	11.1	81.09	16.1	55.89	21.1	42.66	26.1	34.48
6.2	145.1	11.2	80.36	16.2	55.56	21.2	42.45	26.2	34.35
6.3	142.9	11.3	79.65	16.3	55.22	21.3	42.25	26.3	34.22
6.4	140.6	11.4	78.94	16.4	54.88	21.4	42.05	26.4	34.10
6.5	138.5	11.5	78.24	16.5	54.54	21.5	41.86	26.5	33.96
6.6	136.3	11.6	77.56	16.6	54.22	21.6	41.67	26.6	33.83
6.7	134.3	11.7	76.92	16.7	53.88	21.7	41.47	26.7	33.70
6.8	132.4	11.8	76.28	16.8	53.57	21.8	41.29	26.8	33.58
6.9	130.4	11.9	75.64	16.9	53.26	21.9	41.09	26.9	33.46
7.0	128.6	12.0	75.00	17.0	52.93	22.0	40.90	27.0	33.33
7.1	126.8	12.1	74.41	17.1	52.63	22.1	40.72	27.1	33.21
7.2	125.0	12.2	73.77	17.2	52.33	22.2	40.53	27.2	33.09
7.3	123.3	12.3	73.17	17.3	52.03	22.3	40.36	27.3	32.97
7.4	121.7	12.4	72.57	17.4	51.72	22.4	40.17	27.4	32.85
7.5	120.0	12.5	72.00	17.5	51.43	22.5	40.00	27.5	32.73
7.6	118.4	12.6	71.43	17.6	51.13	22.6	39.82	27.6	32.61
7.7	116.9	12.7	70.92	17.7	50.85	22.7	39.65	27.7	32.48
7.8	115.4	12.8	70.31	17.8	50.56	22.8	39.48	27.8	32.37
7.9	113.9	12.9	69.77	17.9	50.27	22.9	39.30	27.9	32.26
8.0	112.5	13.0	69.23	18.0	50.00	23.0	39.13	28.0	32.14
8.1	111.1	13.1	68.71	18.1	49.73	23.1	38.96	28.1	32.03
8.2	109.8	13.2	68.17	18.2	49.44	23.2	38.79	28.2	31.92
8.3	108.5	13.3	67.66	18.3	49.18	23.3	38.62	28.3	31.81
8.4	107.2	13.4	67.15	18.4	48.91	23.4	38.46	28.4	31.70
8.5	105.9	13.5	66.67	18.5	48.65	23.5	38.30	28.5	31.58
8.6	104.6	13.6	66.19	18.6	48.38	23.6	38.14	28.6	31.47
8.7	103.4	13.7	65.70	18.7	48.13	23.7	37.98	28.7	31.36
8.8	102.3	13.8	65.22	18.8	47.87	23.8	37.82	28.8	31.25
8.9	101.1	13.9	64.78	18.9	47.62	23.9	37.67	28.9	31.14
9.0	100.0	14.0	64.29	19.0	47.37	24.0	37.50	29.0	31.04
9.1	98.91	14.1	63.82	19.1	47.12	24.1	37.34	29.1	30.93
9.2	97.84	14.2	63.37	19.2	46.87	24.2	37.18	29.2	30.82
9.3	96.79	14.3	62.92	19.3	46.63	24.3	37.04	29.3	30.72
9.4	95.75	14.4	62.50	19.4	46.39	24.4	36.89	29.4	30.62
9.5	94.74	14.5	62.07	19.5	46.16	24.5	36.73	29.5	30.51
9.6	93.73	14.6	61.65	19.6	45.91	24.6	36.59	29.6	30.40
9.7	92.75	14.7	61.23	19.7	45.67	24.7	36.45	29.7	30.30
9.8	91.78	14.8	60.82	19.8	45.45	24.8	36.29	29.8	30.20
9.9	90.91	14.9	60.41	19.9	45.22	24.9	36.14	29.9	30.10
10.0	90.00	15.0	60.00	20.0	45.00	25.0	36.00	30.0	30.00
10.1	89.12	15.1	59.61	20.1	44.78	25.1	35.85	30.1	29.90
10.2	88.25	15.2	59.20	20.2	44.56	25.2	35.71	30.2	29.80
10.3	87.39	15.3	58.82	20.3	44.33	25.3	35.58	30.3	29.70
10.4	86.54	15.4	58.45	20.4	44.11	25.4	35.44	30.4	29.60
10.5	85.71	15.5	58.07	20.5	43.89	25.5	35.30	30.5	29.51
10.6	84.87	15.6	57.69	20.6	43.68	25.6	35.16	30.6	29.41
10.7	84.08	15.7	57.33	20.7	43.48	25.7	35.02	30.7	29.32
10.8	83.33	15.8	56.96	20.8	43.27	25.8	34.89	30.8	29.22
10.9	82.57	15.9	56.60	20.9	43.06	25.9	34.74	30.9	29.12

FUELS FOR MINIATURE I.C. ENGINES

An analysis of the requirements for model petrol, diesel and glow-plug motors with an appendix of practical fuel formulae by

HENRY J. NICHOLLS, B.SC.

In compiling this article I have been indebted to Mr. Robert Ginn, of the Anglo-American Oil Co., for much of the technical information contained therein. In co-operating with him over a period of many months on small motor fuel research, I have been fortunate in having his knowledge and experience always to hand.

The following abbreviations and terms used are explained for non-technical readers: C.R., Compression Ratio; B.Th.U., British Thermal Unit; Octane Value, Antiknock Factor; Cetane, Negative Octane; S.I.T., Self Ignition Temperature; S.B.P., Special Boiling Point; V.I., Viscosity Index. *H. J. N.*

INTRODUCTION

ONE of the most neglected aspects in the field of miniature motor operation has been that of fuels.

Inevitably the final performance of a motor once its design has been finalised by the mechanical process of building it, depends entirely on the quality and properties of the fuel employed in its running. The fuel is, therefore, every bit as important as the engine.

This is certainly more often the case with diesel (compression ignition) engines than with petrol motors, and at the time of writing, the glow-plug is so early in its infancy in this country that very few modellers can yet have had the opportunity of perfecting their technique in its handling.

Let us consider firstly then the essential qualities and properties of any fuel.

WHAT IS A GOOD FUEL?

A good fuel is one which will enable the user to get from his engine the maximum performance compatible with ease of handling and long engine life.

A good fuel must, therefore, be a compromise. The life and indeed the performance of the motor will depend on the lubricating qualities of the fuel, whereas the out-and-out power output will depend on the heat generated by the burning of the mixture. These two requirements may, in certain cases, be opposed one to the other and a compromise will be the only practical answer.

Again, a fuel that can be handled easily by an expert, whose long experience has taught him all the tricks there are to achieve ease of starting, may be quite impractical for the beginner. The beginner requires ease of starting long before ultimate performance and should choose his fuel accordingly.

The fuel should therefore be chosen not only in relation to the motor and the performance required, but also having regard to the experience and knowledge of the user.

FUELS FOR SPARK IGNITION ENGINES

It is odd that the oldest friend we have in the world of small motors, the miniature petrol engine, has perhaps been the most neglected in the matter of fuel research.

As soon as such research was carried out, the first thing that became evident was that the requirements for an efficient fuel in full sized engine practice bore little relationship to fuel requirements in our up-to-10 c.cs. motors.

The qualities of any fuel can be summarised as follows, as long as you will allow some oversimplification to avoid too technical an appreciation :

(*a*) The power output of fuel depends on the number of B.Th.U's per unit weight of fuel.

(*b*) The starting qualities of the fuel depend on its volatility.

(*c*) The wearing qualities of the fuel depend on the blending property of the fuel with a suitable lubricating oil as all our motors depend on petroil lubrication or the equivalent.

For ease of starting the gasoline or petrol should have a low boiling point and it is a great advantage for the whole of the fuel to have as narrow a distillation range as possible ; *i.e.*, the whole of the spirit should boil off over a temperature range of only eight or ten degrees. This means that under storage conditions, or working conditions where the fuel will be subjected to conditions producing evaporation, the qualities of the fuel will not be affected by fractions evaporating leaving behind part only of the original, thus affecting both starting and performance. A typical case is where a filled tank may be subjected for thirty minutes or more to a boiling hot sun.

With a narrow distillation band fuel such as S.B.P. 1, the worst that can happen is that the proportion of lubricating oil will be increased by evaporation. With a complex blended fuel the whole characteristic may alter, making starting difficult and performance something less than one would expect.

The lubricating oil to be blended with the fuel must be as carefully chosen as the fuel itself. A far better result is obtained by using a small proportion of a heavy grade oil than a high proportion of a light oil. The American S.A.E. numbers will be familiar to most readers. S.A.E. 70 is the heaviest grade in common use in i.c. engines and is just ideal for blending with petrol, 25% being the standard proportion for most engines. In the bigger capacities such as the 15 ccs. Forster 99, this can be reduced to 15% or even 12%. Lighter grades of oil should not be used and those loosely termed, " summer grade " or " best XL quality," should be avoided.

So far then the best fuel to use appears to be a blend of a low octane, but highly volatile petrol such as S.B.P. 1, with a first quality mineral lubricating oil of S.A.E. 70 viscosity rating. But there is one more thing we must consider. The behaviour of the lubricating oil under varying conditions. As the oil gets hot it loses its viscosity, *i.e.*, its resistance to the breaking down of the lubricating oil film between working surfaces decreases. The variation of viscosity with temperature is indicated by the oil's Viscosity Index or V.I. number and the higher this is the better.

So far we have not considered an alternative to a petrol-oil mix, but in certain circumstances another fuel may be essential.

The running temperature of the engine will depend on several factors, including :

(*a*) the compression ratio
(*b*) the volumetric efficiency of the engine
(*c*) the heat content (B.Th.U's per pound) of the fuel.

In a high compression racing engine, the desirable or optimum running temperature of the engine may well be exceeded when using a petrol fuel, such as has just been described. In these conditions, the engine does not pink as would its full-sized counterpart, and the first sign of over-heating may well be burnt-out plugs, possibly followed by structural failure.

As factors (*a*) and (*b*) above cannot be varied, it is only possible to alter the fuel; and the alternative to petrol base fuel is an alcohol base fuel with a lower running temperature characteristic.

Methanol will not, however, blend with a normal mineral oil and a Castor base lubricating oil has to be employed. Again, it should be a good grade of Castor base lubricating oil and not medicinal castor oil. And the Methanol should be power blending methanol and not commercial methyl alcohol.

The proportion of lubricating oil is 25% and it is not advisable to reduce this figure.

One thing must be made quite clear. No gain in power will result from the use of racing fuel, such as Methanol-Castor in an engine with a compression ratio suited to the use of a straight petrol-mineral oil mix. Rather the opposite. Operating conditions may be made more difficult and power actually lost.

FUELS FOR USE IN COMPRESSION IGNITION ENGINES

In the compression ignition or "diesel" engine, the principle on which the motor works is entirely different from that of spark ignition and the very qualities that are essential in a petrol motor may well be most undesirable.

The fuel usually consists of more than two components and the requirements for optimum performance cannot be as conveniently summarised as they were for spark ignition.

Starting now depends on the S.I.T. of the ignition fraction of the fuel.

Power output will depend not only on the number of B.Th.U's per unit volume or weight of fuel, but on the efficiency of the engine in burning that fuel, and anyone who has seen the amount of unburnt fuel that exhausts from the average small diesel motor, will realise that the best of them use only a fraction of the fuel inducted.

Wearing qualities of the fuel will, as before, depend on the quality and proportion of lubricating oil used.

Essentially, the average fuel consists of an ignition fraction which is universally Ethyl Ether; a burning or detonating fraction that varies from Diesel oil and petrol or paraffin oil to the medicinal paraffin recommended by some Continental makers; and the lubricating oil.

After prolonged research over a period of more than a year with nearly thirty makes of motors, it was concluded that for all diesels with variable compression the best fuel was that based on Diesel oil, a high grade mineral lubricating oil, and ether, in roughly equal pro-

portions. Added to this fuel a small percentage of Amyl Nitrate has the effect of making the compression setting much less critical, which indirectly makes starting much easier and the running settings under varying conditions of load much easier to achieve. The Amyl Nitrate is acting as an accelerator to combustion in this instance.

I have already referred to the dirty exhaust that exudes from the exhaust ports of the average diesel and this is due, not only to the unburnt lubricating oil that has to be exhausted, but to a proportion of the diesel or other oil that remains unburnt.

It is a characteristic of all etherised fuels, that under the effect of the detonation wave resulting from the self-ignition of the ether, the combustion of the other fraction of the fuel that it is intended should burn (*i.e.*, other than the lubricating oil) is always incomplete.

This incompleteness of combustion definitely bears some relationship to the cetane rating of the fuel. Where the fuel has a high cetane rating the combustion is at its best and the exhaust cleanest. This condition is obtained with a good grade of diesel oil. Where the fuel has no cetane value but an octane value, as is the case with petrol, the combustion is most incomplete and the exhaust at its worst. Paraffin comes somewhere in between the two extremes.

Naturally the completeness of combustion also affects the performance of the motor and the diesel oil fuels score every time on this point.

Rate of wear also appears to be better with diesel oil fuels, probably due to a reduction in the dilution of the lubricating oil as compared with paraffin oil.

Where a paraffin fuel is definitely recommended by makers and the reader feels obliged to use it, the correct additive to improve flexibility is not Amyl Nitr*a*te but Amyl Nitr*i*te. Up to 5% can be safely employed.

GLOWPLUG FUELS

Not very much is as yet known on the exact relationship between the fuel requirement, and the compression ratio and volumetric efficiency of the engine. That these three things are bound up together is obvious from the practical results obtained under test-bench conditions.

Certain it is that some petrol engines lend themselves admirably to glow plug operation, whereas others for no apparent reason are most intractable.

The best fuels are all based on a Methanol-Castor blend with an addition of a nitro-paraffin for really high performance and ease of starting. Unfortunately nitro-paraffins are unobtainable in this country, except in small laboratory quantities and there is no commercial nitrated fuel available. Excellent results can be obtained, however, with a straight Methanol-Castor oil blend of about $2\frac{1}{2}$-1.

Maximum R.P.M. rise steadily as the proportion of added Nitro-methane increased up to 30%. After that there is little improvement up to 50%, the proportion always being reckoned in relation to the total fuel without lubricating oil.

Experiments with other compounds whose exact chemical properties are not known, should be avoided by amateurs and left to

the professionals and the oil companies who are now researching on fuels. Certain nitro compounds may appear to be quite useful but may, in fact, seriously affect the working parts of the motor. As an example, Nitro-benzene can under certain conditions break down and produce free nitric acid, which will etch the piston and cylinder liner of a motor with disastrous results.

The formulae given in the appendix are all safe, have been tried out in a whole series of motors, and found to give really good results. The gasoline base fuels are hotter running than the methanol base ones. They are generally more suitable for running in lower compression motors from 5½-1 to 8-1½. The methanol fuels will work well in engines from 7½-1 to 12-1, but there is such an overlap and each engine has such individual characteristics, that full tests should be made on the bench before deciding which fuel to employ.

SUMMARY

In every case, whether the engine is petrol with spark ignition, glow-plug operated, or compression ignition, the choice of fuel is extremely important.

It should be selected in relation to the engine to be used, the performance required, and the state of knowledge and experience of the operator.

Really good grade lubricating oil, preferably equivalent to the American rating of S.A.E. 70, should be used or where a castor base oil is needed, a good grade of racing castor oil.

A low octane highly volatile petrol is best for normal spark ignition. Racing fuels should be based on power blending Methanol.

A final word of warning—when experimenting never leave fuel residues in engine or carburettor. Clean out with neat petrol and finally lubricate the engine throughout with a cleansing oil by introducing through inlet and exhaust and turning over by hand at least twenty times.

APPENDIX

The following diesel fuels have been thoroughly tried out and can be recommended as being satisfactory in every way.

	Ether	S.A.E. 70	Racing Castor	Diesel Oil	Paraffin	Amyl Nitrate	Amyl Nitrite
1	50	20	...	28	...	2	...
2	30	30	...	38	...	2	...
3	33	32	...	...	32	...	3
4	50	25	...	...	20	...	5
5	15	25	...	43	10	2	5
6	35	...	25	...	37	...	3

The following Glow-fuels have been tried in various motors and give good results in engines of various C.R. values.

	Methanol	Racing Castor	S.B.P. 1	S.A. E.70	Nitro-methane	Nitro-propane	For motors of C.R.
1	72	28	...	...	...	...	10 : 1
2	50	25	...	...	25	...	8 : 1
3	45	25	...	...	30	...	7 : 1
4	...	...	50	25	...	25	6 : 1

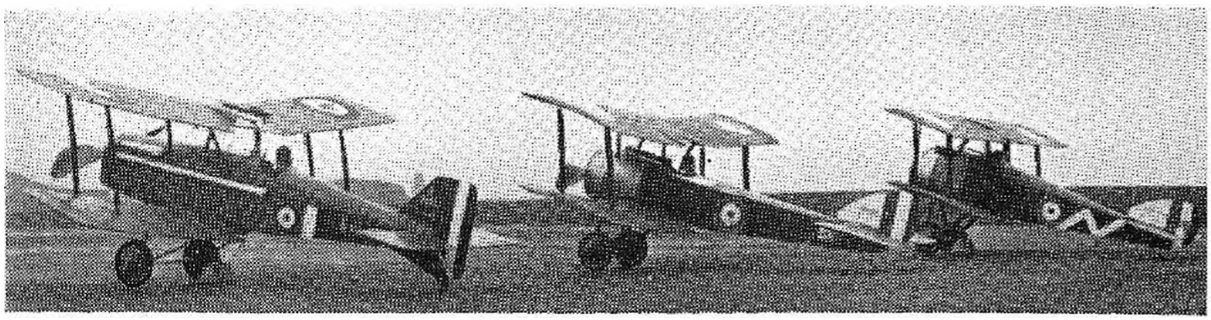

DIESEL-POWERED FLYING SCALE MODELS

By E. J. Riding

Without a doubt the model diesel engine is responsible in no small way for the increasing popularity of the flying scale model. For medium and large sized models, the rubber motor, with its inconsistent thrust, load distribution, short running duration and need for un-scale airscrews is being abandoned in favour of the popular brands of diesel engines now being placed on the market. By these remarks one is not insinuating that the diesel engine is the answer to a maiden's prayer. As far as the scale modeller is concerned the diesel engine has one great drawback, and that is the fact that it is virtually impossible as yet to obtain an engine that is capable of being throttled back to tick-over speed. The craze for high speed flight brought about by the control (*sic*) line experts seems to have driven the idea of developing this feature away from the minds of the engine manufacturers. One can, by the use of scale diameter airscrews slow down considerably the speed of one's engine, but there would appear to be plenty of scope for the experimental worker in this direction.

One other fault which can be very annoying at times is the ability of the average Diesel engine to sling fuel oil into every crack and

Heading gives a realistic impression of three old time flying scale models lined up on the tarmac. Left to right they are Sopwith Pup, S.E.5, and Sopwith Camel, all designed to fly with small diesel engines.

On the left is E. J. Riding's Bristol Bullet in flight. This machine has proved a good example of successful conversion from rubber to diesel power.

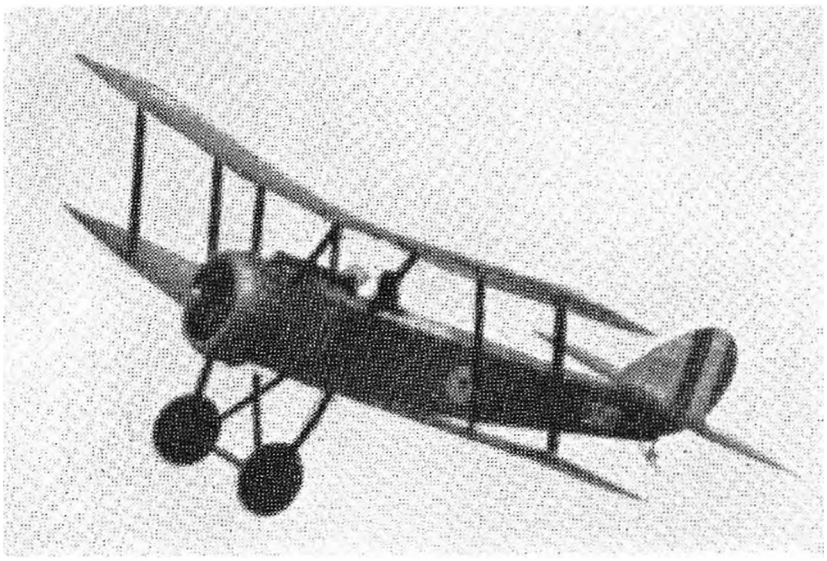

The Sopwith Pup in flight. This 1/8th scale model has proved a most tractable aircraft and flown successfully with a variety of miniature engines.

crevice of the airframe. This can be combated to a certain extent by fitting oil-proof bulkheads of doped tissue immediately behind the engine mounting, or by arranging a system of collector plates and drains behind the cylinder head by means of which the residual oil can be conducted away beneath the machine.

We know that the snags associated with the powered flying of scale models are as yet a long way from being ironed out completely, and it is one of the aims of this article to show how constructors have been tackling these problems during the current year.

The chief troubles encountered by the scale modeller are torque and flying instability. For some time now it has been the practice of armchair theorists to explain in great detail and with many formulae how torque is set up, and it is hoped that the following notes may help the novice to solve his own particular problems in a practical manner.

In powered scale model flying the choice of design is, of course, one of the most important factors. The beginner, therefore, would be well advised to select some well-tried rubber driven design, preferably a high-wing monoplane or simple biplane, and modify the airframe to take the particular brand of engine he has in mind.

In actual fact a biplane model isn't half so formidable as most builders would have us believe. The main objection would seem to lie in the struts and bracing wires, but provided that each wing cellule is assembled as a complete unit and detachable as such from the fuselage, there should be no more risk of damage in the event of a crash than would be experienced with a monoplane. If anything, the biplane, on account of its slower flying speed, can experience many more crashes than a monoplane without suffering damage.

Typical examples of rubber driven models converted for power flying are the writer's Bristol Bullet, and Gilbert Fisher's Sopwith Pup, both to a scale of 1/8th, on which the only modifications needed were the substitution of suitable engine mountings and cowlings. About five degrees of side-thrust were given to the engine mountings to counteract torque, and in both cases the all-up weight was found to be considerably less than that of the original model. The Bullet has been flown regularly and with great success during the last six months and can be relied upon

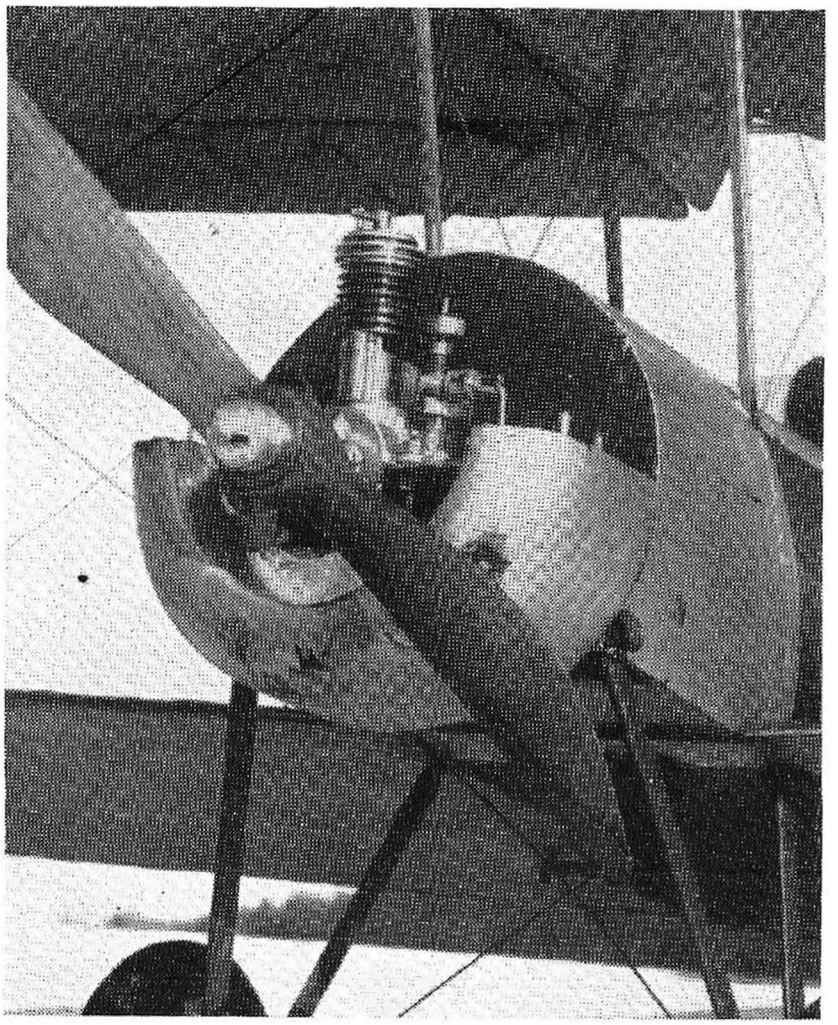

Cowling removed to show engine installation in the Bristol Bullet. Most successful engine here has been the .87 c.c. Amco, which has just the right amount of power, and, moreover, fits very snugly in the space available.

On the opposite page may be seen engine installation on a modern machine—in this case J. M. Greenland's impressive model of the D. H. Chipmunk. Easy access for adjustment and filling makes for pleasanter and certainly more successful flying.

to give an excellent account of itself. Under rubber power the model had a tendency towards instability, due no doubt to the very small rudder area, but the more powerful slipstream created by the engine driven airscrew seems to have cured this. If anything, the model is now super-sensitive to rudder control. One hot afternoon during the summer, the Pup actually soared for about five minutes in the thermal currents rising from the runway at Leavesden aerodrome.

Another model in the biplane category is L. C. Bagley's 1/8th scale Nieuport 17.C-1, which incidentally has proved to be an extremely popular choice amongst aeromodellers this year. In order to check the tendency towards instability set up by the top plane, the rudder was hinged to the sternpost and a lever arm, on the end of which was soldered a balance weight, which was fitted to it so that the arm was free to swing from side to side *inside* the fuselage as and when the machine started to bank. It will be remembered that most of the Belgian duration types at the Eaton Bray International Meetings incorporated this idea. When the Nieuport is in flight it is possible actually to see the rudder swinging from side to side, correcting each attempt to drop a wing by steering the model in the opposite direction.

Another method of counteracting this form of instability is being tried out in a Spad S.VII, also by L. C. Bagley. On the Spad, the ailerons are interconnected to a pendulum which is free to swing in

a transverse plane, thus when wing drop occurs, the pendulum corrects by applying opposite bank.

As yet, this model has not been tried in the air, but the idea has been tried out successfully by P. E. Norman this year with his miniature Typhoon, and forms an interesting approach to the solution of this particular snag.

In the low-wing category, the most popular design this year has been J. M. Greenland's 1/8th scale De Haviland Chipmunk. A slight amount of side thrust, wing tip wash-out and rudder setting were used to counteract torque on this machine. In flight the Chipmunk proved to be extremely sensitive to the slightest alteration in trim ; in fact several days of painstaking labour were spent during the process of trimming it for straight and level flight. One remembers a certain occasion at Leavesden when the machine was taking off with 3s. 9d. in threepenny bits stowed away in the rear end of the fuselage ! Ultimately the model was found to have a take-off speed of around 20 m.p.h., with a run of about 100 feet before unsticking, and any attempt to get it airborne sooner usually resulted in a violent climb and stall from which it frequently failed to recover.

The Chilton D.W.1, also by John Greenland, had the same characteristics. When hand-launched it would fly very fast until the power ran out, after which it became unstable, dropped a wing, and crashed. The addition of celluloid wing tip slats have to all intents and purposes done away with this unpleasant snag. The other low-wing monoplane shown here, a B.A. Swallow II, by Gilbert Fisher, has proved a good deal more docile. In the first place, the pronounced dihedral on the full sized aeroplane lends itself well to the model builder, and the large wing area makes it very much slower in flight. When the power is shut off, the subsequent glide and landing are irreproachable.

Another model of an experimental nature was a $\frac{1}{8}$th scale D.H.2 pusher fighter of 1916, also built by John Greenland.

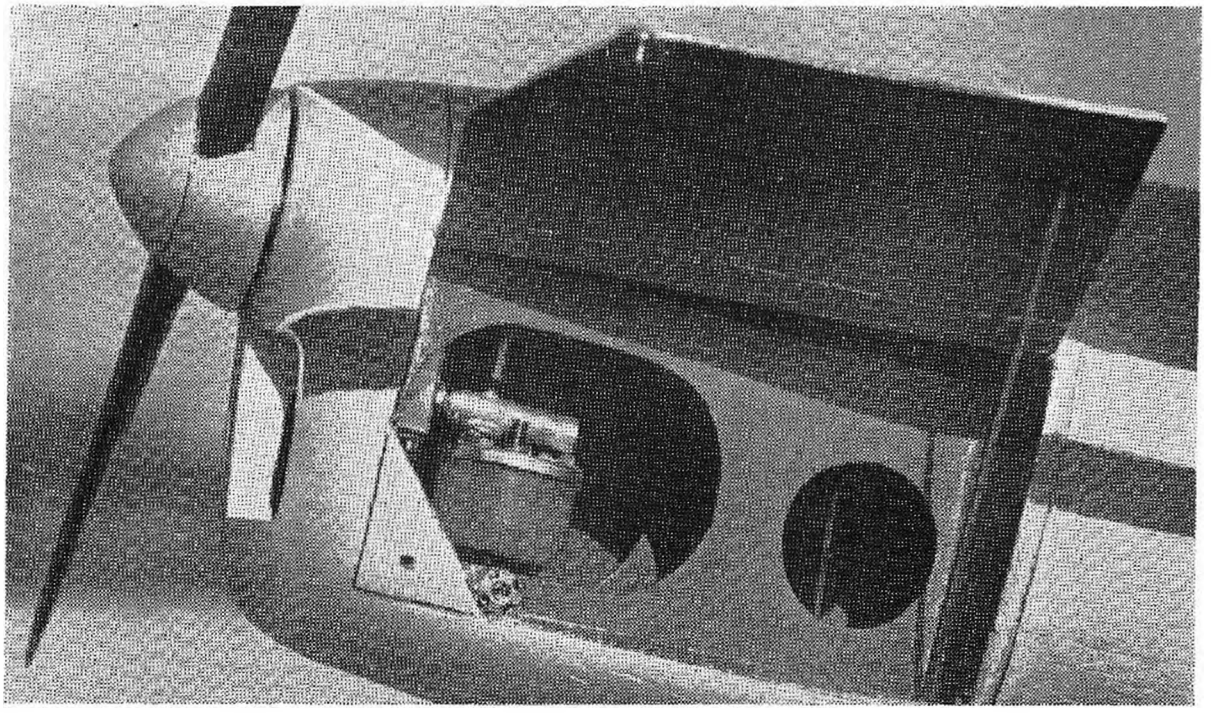

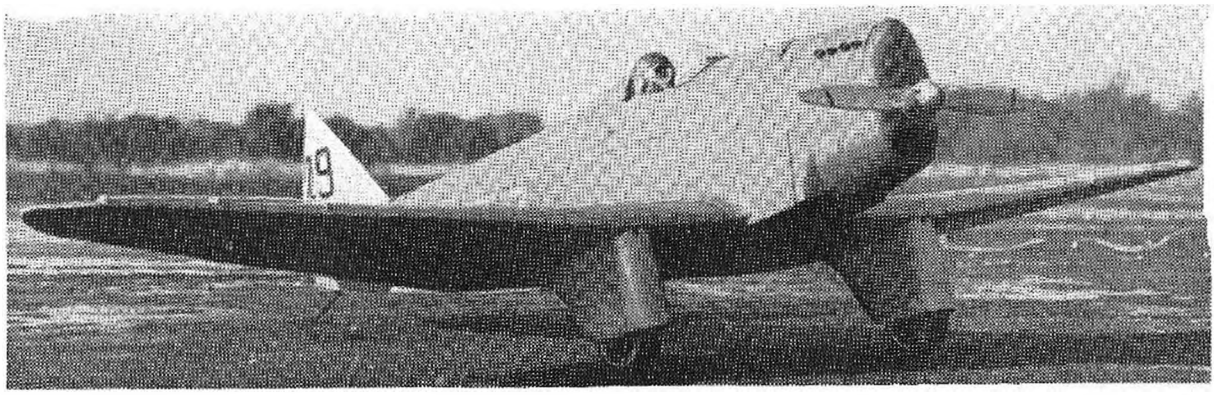

In this model a Frog engine was mounted in such a manner that the cylinder formed one unit of a dummy Le Rhone rotary engine. Naturally, the Frog being fixed could not revolve with the airscrew, but scale effect was maintained to a remarkable degree.

Gliding tests proved eminently satisfactory, the machine making slow and perfectly stable landing approaches when hand launched from shoulder height.

The model was tethered for its first powered flight, the operator holding a length of cord, the other end of which was attached to the sternpost. On the first attempt the model ran for about 300 yds. without unsticking, and since it appeared to need adjustment to the line of thrust, packing was inserted beneath the top bearer bolts and a second trial made, but with no appreciable difference.

Subsequent hand launching under power resulted in a short level flight, followed by a dive which, steepening violently, resulted in the complete disintegration of the model and an end to further experiments.

I add these notes in the hope that other experimenters with powered pusher scale models will send us accounts of their experiences, since quite obviously this type of model could bear a good deal of research.

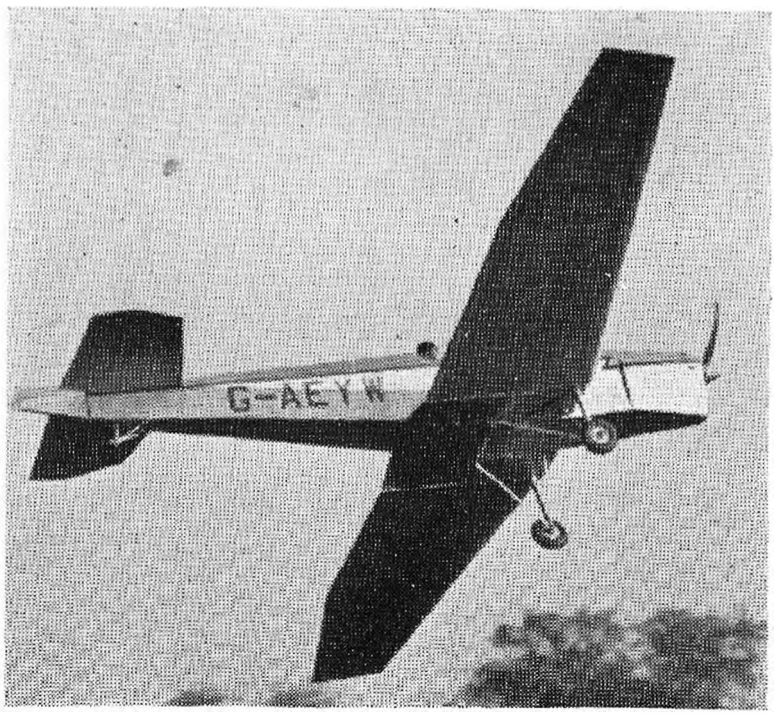

Top left : Chilton D.W.I. makes a most imposing model that has well repaid the builder's patient trimming and modifications.

Top right : B. A. Swallow II built by Gilbert Fisher. The prototype has pronounced dihedral and lends itself well to a scale model.

Bottom left : Fisher's B.A. Swallow in flight ; the model is a very stable and docile performer that can be relied on to turn in good flights on demand.

Bottom right : L. C. Bagley's Spad S.VII, featuring pendulum controlled ailerons, which has yet to pass its flying trials.

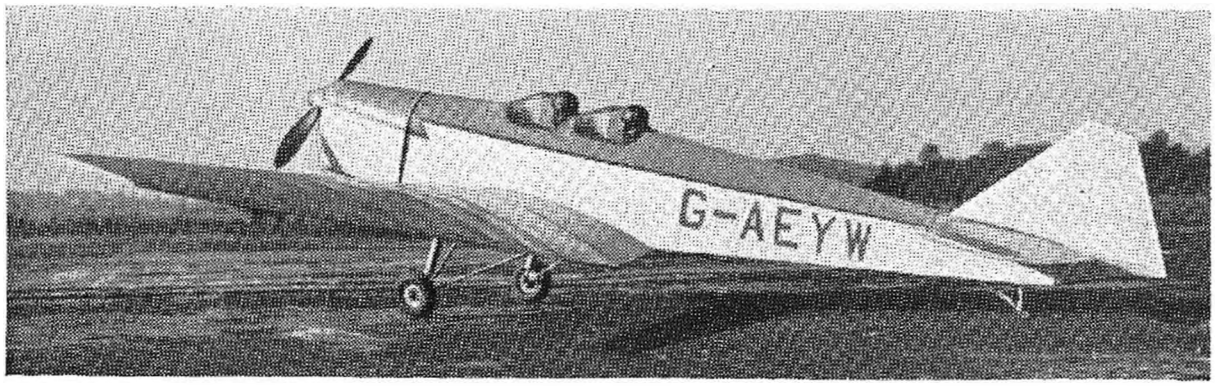

Finally, some good points to remember when constructing one's first Diesel driven scale model are : (1) Sensible choice of design—remember, you can't fly until you can flutter ! (2) Make sure you've got the right engine for the size of model you have in mind—the maker's instruction leaflet will put you wise to this. (3) Unless they are of the knock-offable pattern, build the engine bearers well into the main fuselage structure—if possible take them as far back as the cockpits and make them out of good straight-grained oak or ash. (4) Design the cowlings so that not only can the needle valve, choke tube, and compression screw be accessible, but that it is possible to withdraw the fuel tank for cleaning purposes. (5) Wings and tail surfaces should be sprung in such a manner that they are free to come away from the fuselage in the event of a crash. (6) Mount the airscrew so that it comes to rest horizontally when the engine stops. (7) When test flying, the best procedure to adopt is as follows : Trim the model to glide satisfactorily from a hand launch into long grass. Put a small quantity of fuel into the tank and allow the model to take off. Any tendency to climb too abruptly can then be counteracted by giving downthrust until normal flight is achieved. Turning can be checked by offsetting the motor or by rudder movement.

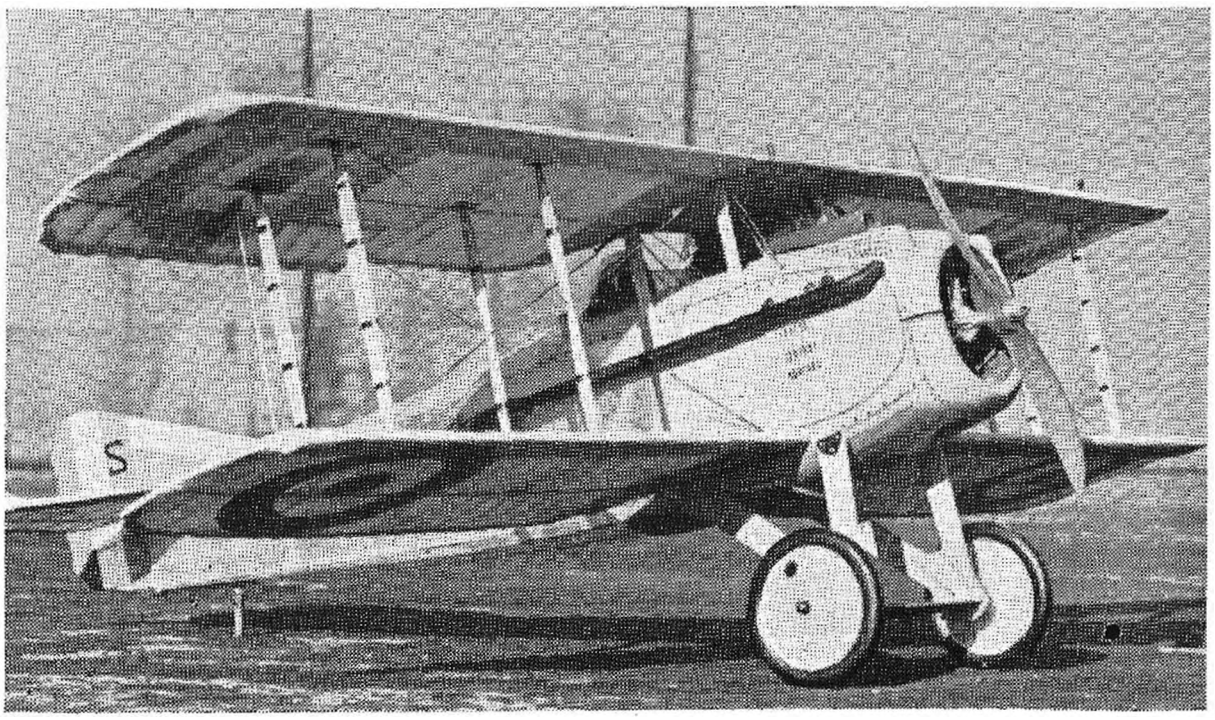

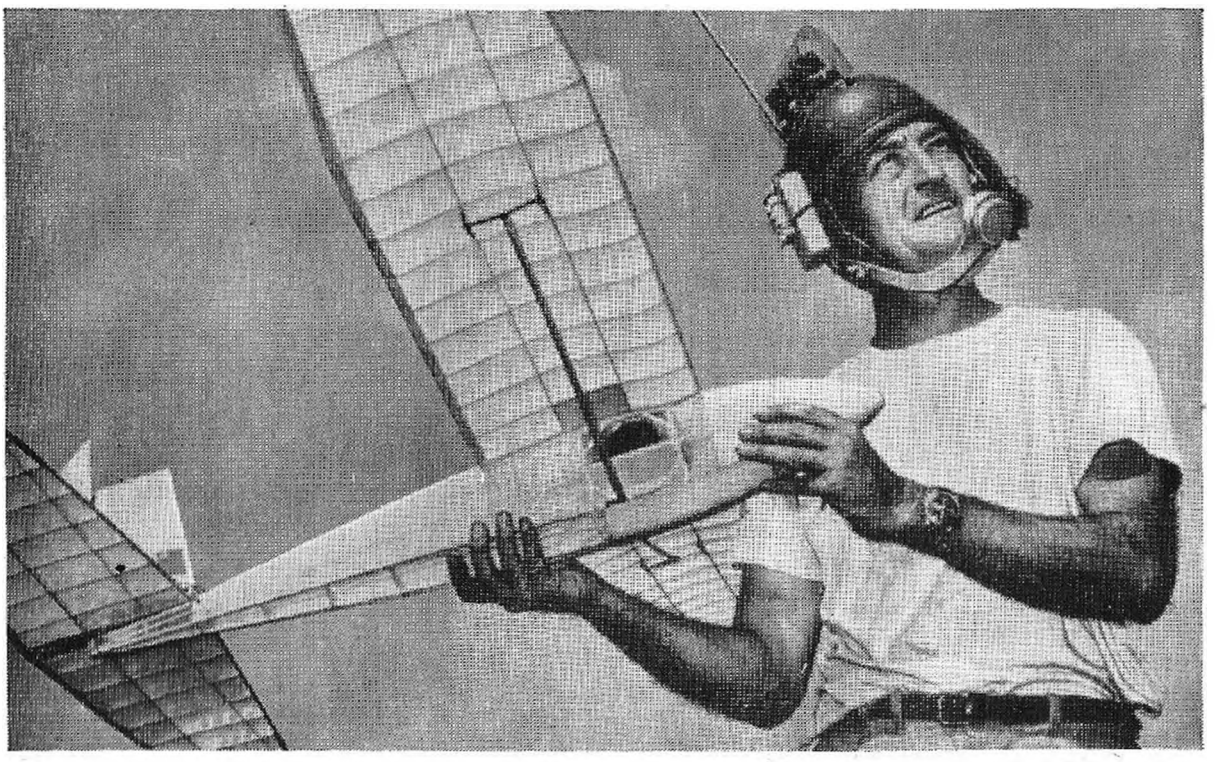

New York Times photo

Famous American Radio Control specialist Jim Walker, looking like a man from Mars in his ingenious helmet aerial and transmitting set. His performance with the glider shown and with his other r/c aircraft must be seen to be believed.

RADIO CONTROL FOR ALL

An introductory article to Radio Control by HENRY J. NICHOLLS, B.Sc.

There is no question that Radio Control for Model Aircraft has a tremendous future, and it is true that there is more interest being shown in this phase of aeromodelling now than ever before. Unfortunately, many would-be enthusiasts, most of them power fliers of experience, are put off through lack of knowledge of radio technique, in the belief that such knowledge is essential to its successful employment in model aircraft. This business of a rational approach to Radio Control needs emphasising. There is far too much made of the mysteries of radio by its devotees which does more harm than good.

GENERAL CONSIDERATIONS

The first essential to the successful flying of a Radio Control model is the ability to design, trim and fly such a model. An intimate knowledge of radio transmitter and receiver design is no more necessary than a similar knowledge of engine design, and a knowledge of radio circuits is certainly no more useful in handling Radio Control equipment than a technical knowledge of metallurgy is necessary to the successful handling of a petrol or diesel motor.

One way of ensuring a successful future for radio controlled models is to treat the radio equipment just as an engine, ignition equipment, or a pair of airwheels is treated : as one of the machine's component parts. And this happy state of affairs will soon be reached now that commercially produced equipment is available.

The range of the equipment depends on many factors, but a practical figure is ½ mile at ground level, which actually gives a much greater effective range at any height. Maximum range of currently available equipment is about 3 miles at a height of 5,000 ft., much more than one can make use of.

The frequencies at which the G.P.O. allows us to operate without a licence are in the 27 and 464 megacycle wavebands.

The lower frequency is more practical for everyday use in the field and all known commercial equipment works in the 27 mcs. band. This frequency has the advantage that standard valves and components may be used, making the equipment cheaper to produce and much easier to service.

The principles involved, considered at their simplest, are these :

FIRST PRINCIPLES

The equipment consists essentially of two parts. A transmitter capable of transmitting a signal and a receiver together with a servo mechanism which, on receipt of that transmitted signal, operates the control or controls of the machine.

Without any knowledge of radio at all, we can convey the idea of how this is done by means of a " block diagram " as given below :

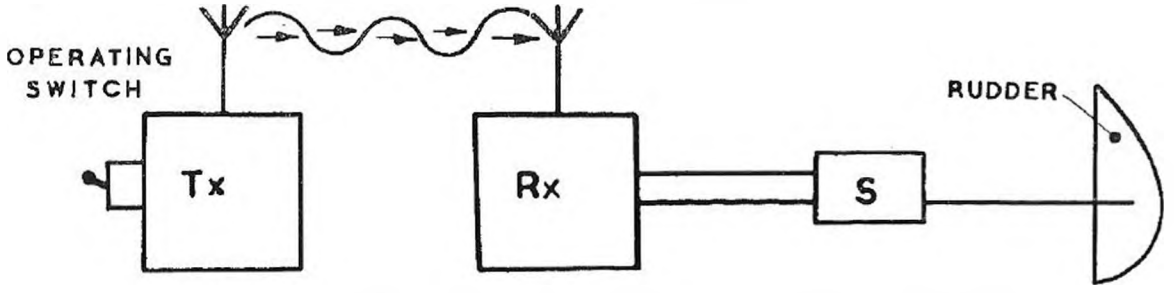

When the operating switch at the transmitter (TX) is operated a signal is transmitted which is received at the receiver (RX). The receiver actuates the servo mechanism (S), which in turn produces a movement at the control—in this case the rudder.

By suitably arranging the mechanism of the servo with four sequential movements the rudder can be made to move to four consecutive positions :—

(*a*) Neutral (*c*) Neutral
(*b*) Right rudder (*d*) Left rudder

This is by far the simplest type of control available and can be described as a single channel—single control equipment with sequential servo mechanism. Such an equipment can be produced with a receiver weight complete with batteries as low as 14 ozs.

One way of achieving more than one control, is to introduce more than one channel through the radio equipment, this being achieved by modulation. That is to say, the character of the transmitted signal is altered into two different types of signal so that at the receiving end

these two different signals can be dealt with separately and each made to operate a different control. A block diagram can again be used to illustrate this system.

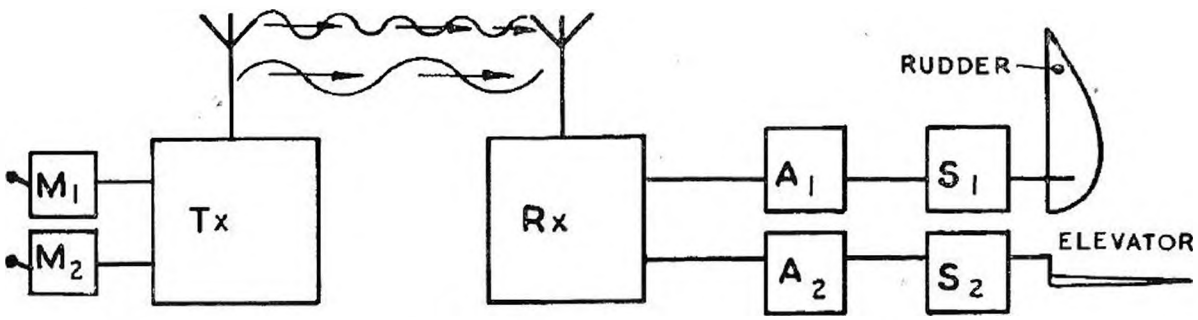

Here operation of modulator number one (M_1) produces a signal which when received at the receiver is only accepted by amplifier (A_1) and consequently only actuates the rudder through the rudder servo (S_1). Similarly M_2 operates only the Elevator, through A_2 and S_2.

Application of the sequential system to each servo will give left and right rudder and up and down elevator with neutral positions in between as with the simple single channel system. And with this system, it is possible to use any combination of rudder and elevator position.

But the equipment is complicated and it is certainly not practical for use in a first approach to Radio Control. In any case, it is not available ready for use as far as is known at present. Some other way of obtaining two controls must therefore be found and the obvious way is to use a single channel radio set-up and improve the servo design.

IMPROVED SINGLE CHANNEL EQUIPMENT

This has been done very successfully in at least one commercial set and here there are eight consecutive servo positions instead of four, giving the following results.

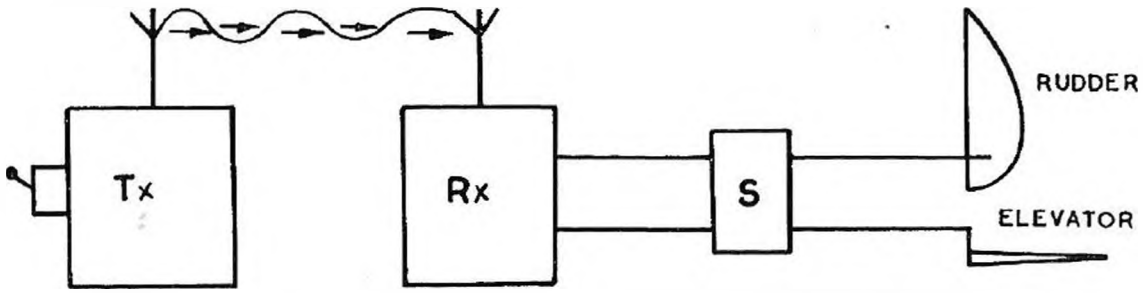

Operation of the transmitter control switch eight times tran mits eight signals—all exactly alike—each of which when received the receiver is employed to make the servo move on to the next positi in sequence.

The sequence can, for example, be :

1. Neutral
2. Up E
3. N
4. Right Rudder
5. N
6. Down E
7. N
8. Left Rudder

Receiver equipment to produce this very full measure of control can be kept down to less than 26 ozs. complete.

This explanation has been made as simple as possible with the intention of making it understandable to modellers with no knowledge of radio at all and it is not the intention to elaborate any further.

But one technical point must be raised.

In order to operate the controls of a given machine, a certain amount of force must be exerted by the servo mechanism and for technical reasons, the useful work that the servo can do is related to the sensitivity and efficiency of the radio equipment, Before coupling any control surfaces to the Radio Control equipment, therefore, very careful consideration must be given to its potential power to operate such controls otherwise overloading will occur with complete failure in flight to respond to the transmitter signals.

So much then for the very simplified treatment of the radio side. What about the model ?

I have no hesitation in saying that the most suitable machine to start off with is a Sailplane specifically designed to operate with Radio Control.

The essential features of such a machine are :—

1. High degree of stability.
2. Slow flying and sinking speeds.
3. Low wing loading to achieve 2.
4. Ability to carry radio equipment and still achieve 3.

From these elementary requirements emerges the fact that a successful sailplane will have to be a reasonable size to carry a minimum 16 ozs. of equipment, and keep its wing loading within bounds.

An ideal flying speed would be about 15ft. sec. and this can be achieved with a suitable airfoil section at a wing loading 6 ozs./sq. ft.

Allowing for a reasonably strong construction this gives an optimum model size of 10 sq. ft., a total weight of 60 ozs., an airframe weight of 44 ozs., and 16 ozs. of Radio Control. With full rudder and elevator control, the all up weight will be increased by 10 ozs. making 70 ozs. and a wing loading of 7 ozs./sq. ft.

Much smaller models have been built and flown successfully—ne as small as 4ft. 6ins. wing span, but the Radio Control equipment 'as light in proportion, being a specially designed outfit weighing only 1 ozs. complete.

A suggested layout is given in the G.A. drawing on the following page. As will readily be seen, the layout is conventional in every respect except that a larger fuselage cross section than F.A.I. has been used in order to accommodate the receiver and batteries.

The servo position is optional, although it is an advantage to have it as near the tail unit as possible to keep the operating rods for rudder and elevator short.

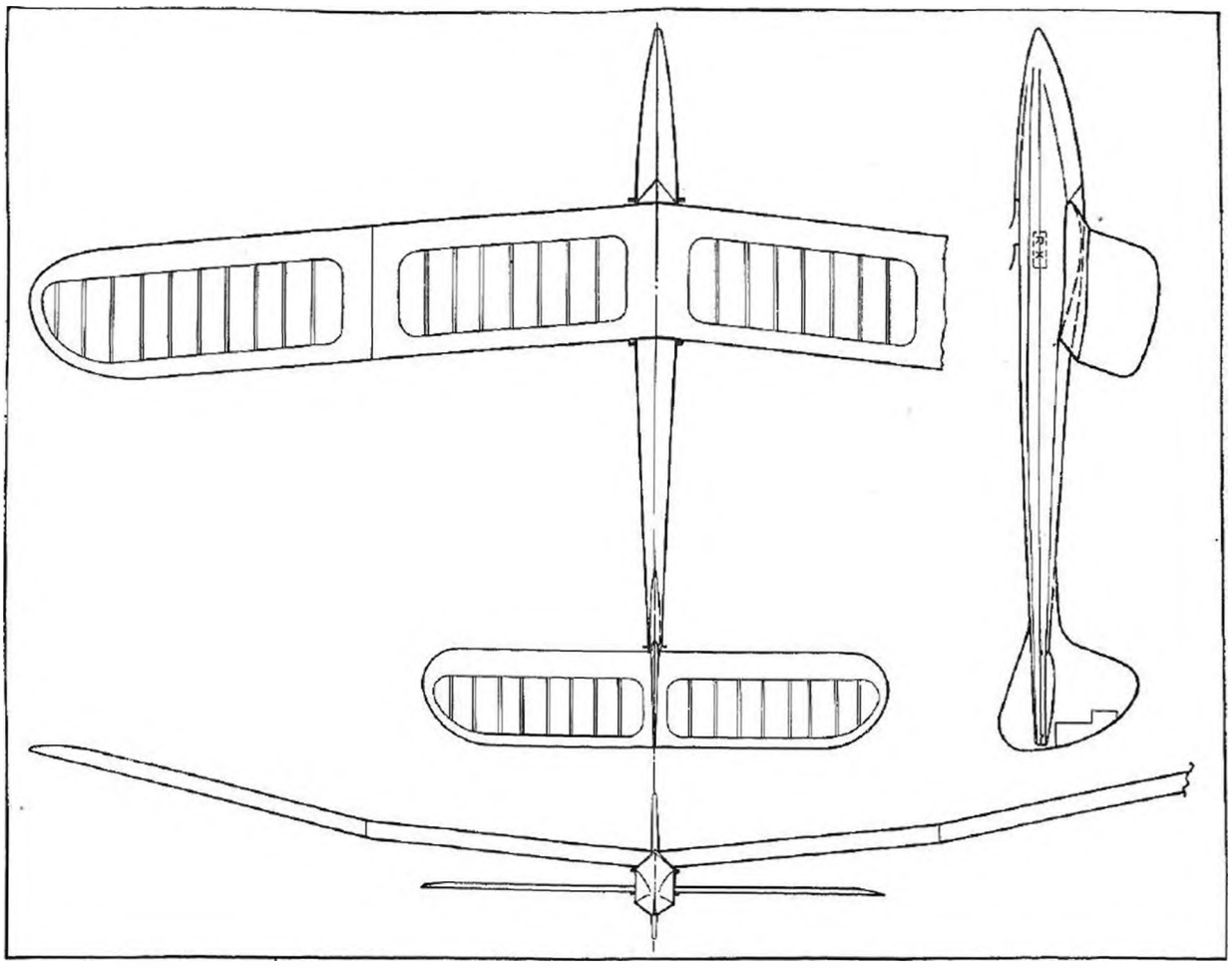

G/A RADIO CONTROLLED GLIDER (RUDDER ONLY) by Ron Mead, Northern Heights M.F.C. Built to F.A.I. specification. Details are as follows :—

Wing Span ...	... 132in.	Wing Area ...	... 1,840 sq. in.
Overall length ...	... 76in.	Weight ...	... 64 ozs. (4 lbs)
Total loading ...	... 4oz./sq. ft.	Wing loading ...	... 5oz./sq. ft.
Tailplane Span ...	... 48in.	Tailplane Area ...	... 460 sq. in.
Total Wing Area	... 2,300 sq. in.	Sweepback ...	... 5°
Airfoil Section ...	... NACA 6412	Dihedral at tip ...	... 11in.
Wing Incidence	... 3½° positive	Tail Incidence ...	... 0°
Cross Sectional Area	... 23 sq. in.		

Rudder and elevator should be 5-7% of fin and tailplane respectively and may be aerodynamically balanced by trim tabs as shown to reduce the load on the servo mechanism.

In learning to fly such a model, it is strongly recommended that only rudder control should be used to start with, the elevator control not being connected at all. By far the best trim is not neutral with right and left turns, but slight left turn in the neutral position—the two rudder positions giving hard left turn and slight right turn.

Thus loss of height can be accomplished by left rudder and full advantage taken of thermal conditions by using either neutral (gentle left turn) or right rudder.

Once the full use of rudder has been accomplished, the elevator control may be connected and then your training starts all over again.

Loss of height to combat excessive up currents may now be

obtained by using down elevator—and up elevator used to make full use of air currents under dynamic soaring conditions.

Thermals may be hunted and held with rudder as before and with practice under conditions of no wind or at least a wind no faster than the flying speed of the model, it will be possible to land it practically at the take off point.

Before proceeding to the flying of any Radio Control power model, there are many hours of useful practice one can put in on a sailplane, such as we have just considered. In fact, I would go as far as to say that for a really satisfactory Radio Control "education" it would be essential to build and fly a sailplane before attempting a power model.

Readers may be interested in the author's proposed power model layout now under construction, the GA drawing of which is also given here.

MERCURY RADIO CONTROL MODEL MK. I. A simple radio controlled model designed for use with commercial radio receiving and transmitting equipment by Henry J. Nicholls.

Span	108in.
Root chord	14in.
Wing Area	10 sq. ft.
Tail Area	2½ sq. ft.
Aspect Ratio	8 : 1

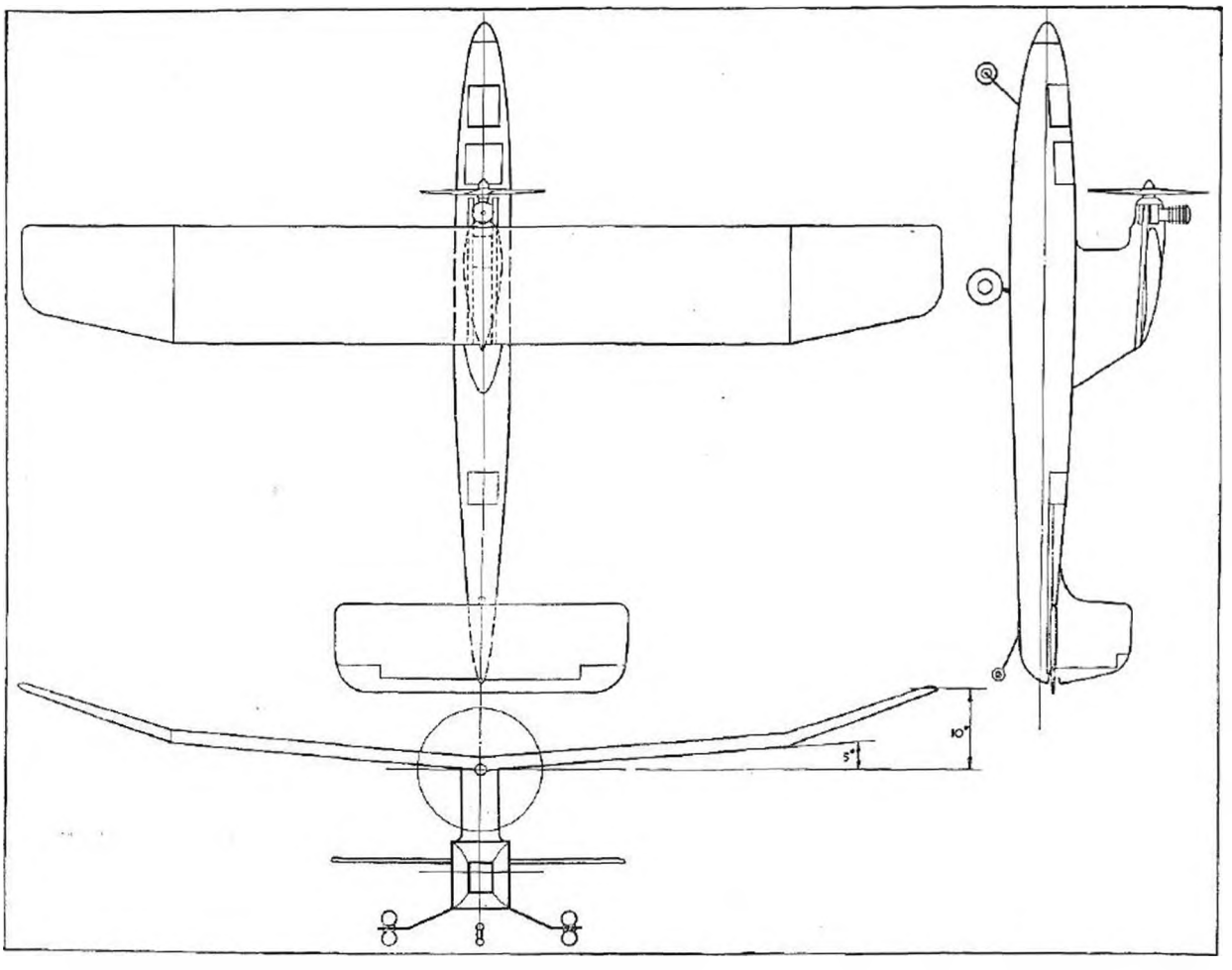

POWER AIRSCREW CARVING AND BLOCK LAYOUT

By H. G. Hundleby.

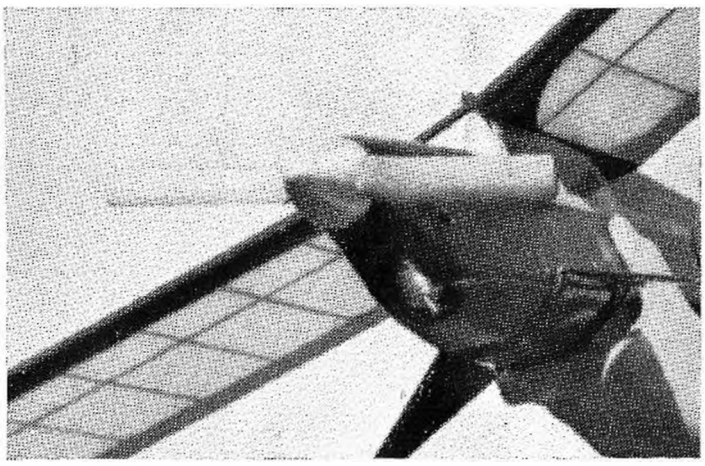

Elegant contest type power model with large spinner fairing in neatly to engine cowling. Large spinners have a practical value for all types of aircraft quite apart from speed control line models.

As soon as the average modeller turns his hand to control line flying one of his main difficulties, apart from flying the darned things anyway, is to maintain a supply of airscrews. Their mortality rate reaches alarming proportions and the cost of replacements beyond the bounds of reason. Sooner or later the average modeller reaches the conclusion that there is only one thing for it and that is to carve his own. This at least was our conclusion and although we may be a little ham fisted with our flying even the experts go around with boxes of airscrews (have a look at their kits at the next contest you attend !).

Right, having decided reluctantly or otherwise that we must carve our own airscrews, here are a few hints and tips together with methods that have been found satisfactory.

Our first problem is that of design and this quite frankly we are not going into in detail. Instead we will utilise as much known information as possible on successful power airscrews. In any event when one has delved into airscrew design it becomes obvious that it is very much a question of compromise and it is therefore impossible to stick to hard and fast rules. Several popular blade shapes and sections are given in Fig. 1 and most engine manufacturers give the diameter and pitch for both free flight and control line airscrews for the engines they produce. It has been found that the average aspect ratio (diameter/max. chord) of control line airscrews is $10\frac{1}{2}$–1 and for free flight airscrews 13 : 1 and these figures will serve as a rough guide for would-be designers. The maximum blade area usually occurs at a point between half and three-quarters of the radius measured from the hub, this being accepted as the most efficient portion of the airscrew blade. The portion of the blade nearest the hub does, in effect, no useful work, in fact, if anything, it is a menace, merely setting up a great deal of drag. It is, therefore, advisable to enclose this portion of the blade in a streamline spinner so reducing the drag to a minimum and leaving the outer and most efficient section of the blade to produce the thrust. Spinners up to 2/5th of the diameter are recommended by theorists and practical results would certainly appear to confirm this.

Assuming readers have decided upon (*a*) the diameter, (*b*) the pitch, and (*c*) the blade shape that they require, it now remains for us to produce a propeller blank which, when carved, will fulfil these three requirements.

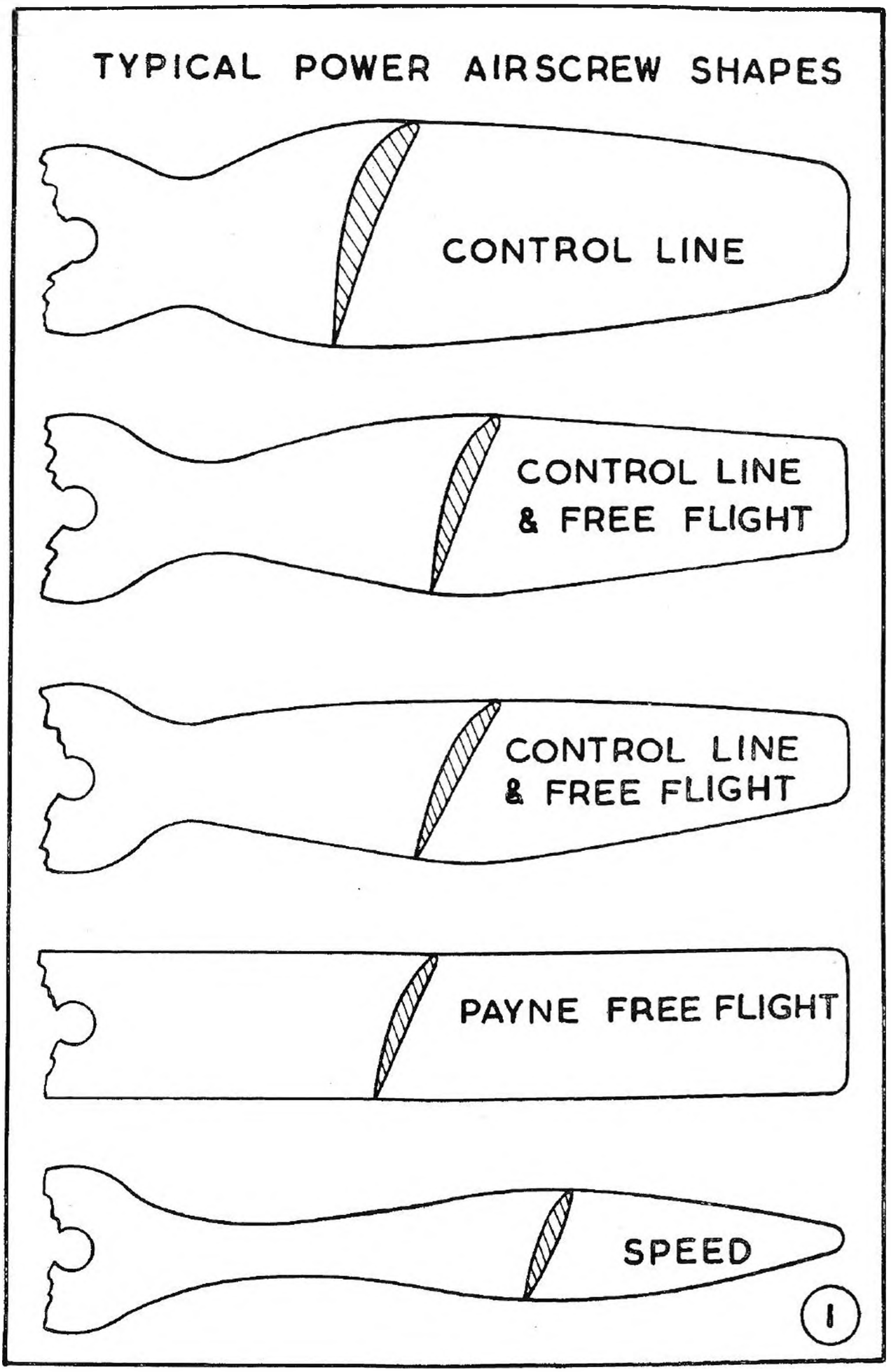
TYPICAL POWER AIRSCREW SHAPES
CONTROL LINE
CONTROL LINE & FREE FLIGHT
CONTROL LINE & FREE FLIGHT
PAYNE FREE FLIGHT
SPEED
1

You will need a drawing board for this job, together with a tee-square, set square, protractor and dividers. We will take an example, Fig. 2, and assume we require an 8 in. diameter airscrew of 9 in. pitch. Firstly, draw a centre line, mark off the radius of the airscrew and also inch stations between the hub and the tip. We only show inch stations on our example to avoid complication, but for accurate results readers would be advised to plot half inch stations when laying out their own blanks. Now draw in your desired blade shape, which might not of course be symmetrical, as in our example. Note that the hub and root of the blade shape have not been shown in our figure as there is very little point in showing the projected view of the hub. We must now plot our plan view of the block (Fig. 2b) and our side view (Fig. 2c), so continue your verticals from the centre line and the various stations A, B, C, D and draw in the horizontal centre lines for the plan and side elevation. Study the accompanying Nomogram for Airscrew Blade Angle which is going to save a great deal of time by enabling us to read off the correct blade angle for a given pitch at any point along the blade. Taking station A first we lay a ruler from the one inch mark on the right hand scale across to 9 on the pitch scale and read off the angle from the centre scale, *i.e.*, 55 degrees. Repeated for station B, C, and D we get 35.5 degrees, 25.5 degrees, and 19.6 degrees respectively. It is now a simple matter to plot your block width and depth at these points as can be seen from Fig. 3 which shows the procedure for Station A enlarged for clarity. Draw a horizontal line and erect at X another line at

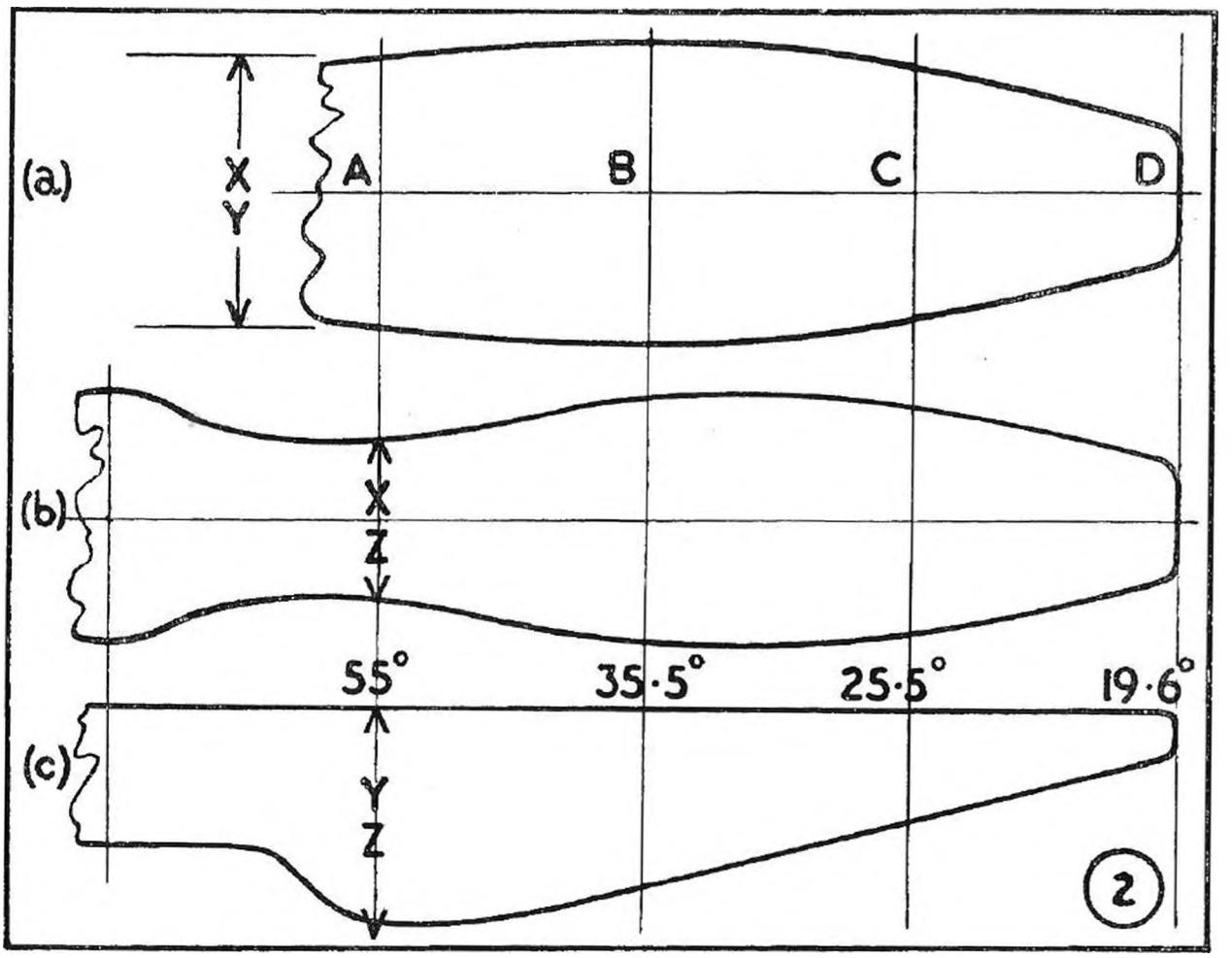

55 degrees to the former. By means of dividers plot the width of your true blade shape at A along this ascending line XY. Drop a vertical from Y to the base line and XZ equals the width of our block at Station A, and YZ equals the depth of our block at Station A. Plot these points and carry out the same procedure for the other stations. The plan view (*b*) and side view (*c*) of your block can now be drawn in. Should your blade shape not be symmetrical as in the example it will, of course, be necessary to plot above and below the centre line at the various stations.

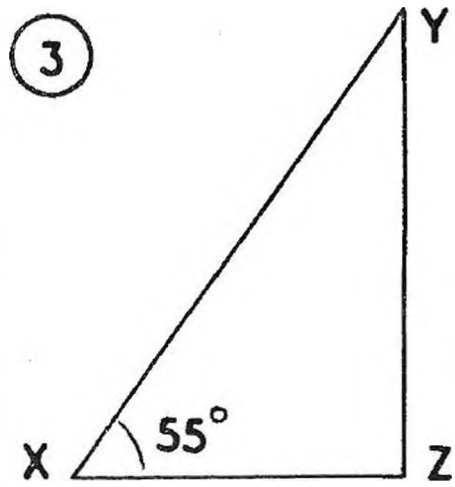

Readers will note that no reference has been made to that portion of the block between Station A and the hub. Obviously the width of our hub depends on the shaft diameter and the depth of our hub upon the engine we are using. Consequently from A to the centre we depart from our true pitch angle and design this portion for practical use rather than its aerodynamic qualities. If you look at Figure 2c for a moment and study the lower curve of the block you will appreciate how thick the block would be at the centre if the correct angle for a 9 in. pitch were taken past Station A. As mentioned previously, the portion of the blade nearest the hub does no useful work and should therefore be reduced to a minimum, consistent with strength of course. Most of the popular airscrews on the market at the present moment maintain their correct pitch angle from the tip to the widest portion of the blade and from there to the hub they remain at the same thickness and depart from the true blade angles. You will notice how in our example we have done the same thing from Station A to the centre, particularly in the side view Fig. 2c, where we have reduced the thickness of the hub quite considerably.

The plan and side view of the block should now be transferred on to Bristol board or cardboard and cut out for use as templates. You will note that a template of one blade only is required and in all cases the centre lines should be clearly marked. We use a template of one blade only in order that the two airscrew blades should be identical. We can now proceed with the actual marking out of our block, but first a word on suitable woods. For power airscrews close grained woods such as Beech, Birch, Ash, Maple, etc., are the most suitable, although woods such as oak and mahogany will do if you cannot obtain anything else. The latter type of woods although hard, fracture easily, and if you are lazy in your carving satin walnut will make the job easier, but is by no means ideal in the way of strength. Having selected your block, cut it slightly oversize on the width and the length, but to the exact depth. Mark your centre lines and centre points in pencil (Fig. 4), then drill the hub carefully to 1/64th of an inch over the diameter of your engine shaft, ensuring that the drill is held perfectly vertical if you do it by hand. Trace down the outlines of your blades using the same template for both sides and checking your centre

lines carefully each time. Now cut out the plan view of your block with either a coping saw, a fretsaw, or, better still, a bandsaw if you have one available (Fig. 5). Keep to the outside of your guide lines and finish the outline with a rasp holding the blade in a wood vice. A half round wood rasp is, by the way, the most useful piece of prop carving equipment you can obtain. Apart from saw and sandpaper we use the rasp for all our shaping, having found it the quickest, most accurate and effective tool for the job. To continue with our blank: the face outline now being cut to shape the next job is to mark out the side elevation, using the template, again checking most carefully that the centre line of the template accurately coincides with that of the block. Once this is marked, use your saw again (Fig. 6) and finish off as before with the rasp. Excess wood can now be cut from the blade before commencing the actual carving. Here again you can use your fretsaw, etc., but go carefully with this operation as it will be necessary to vary the angle of your cut as your saw moves along the blade (Fig. 7). Now for the all important job of carving, firstly making sure that your blank is held firmly in the vice. If you do not possess a vice, drive a nail firmly into your bench (as shown in Fig. 8). Commence the lower surfaces first and use your rasp (as shown in Fig. 9), you will find the curved side of the rasp is ideal for scooping away the wood near the hub, but use the other side nearer the tip. Use diagonal strokes along the blade at first and finish your rasping by shorter

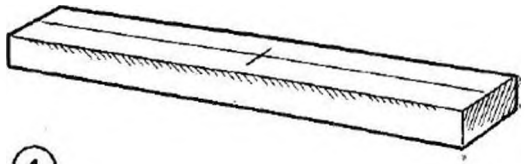

4

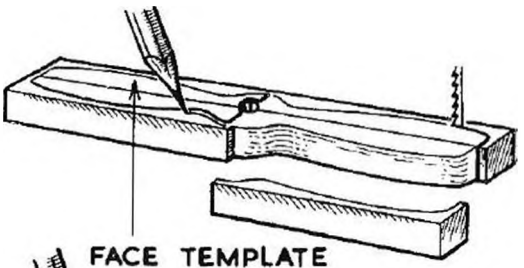

5

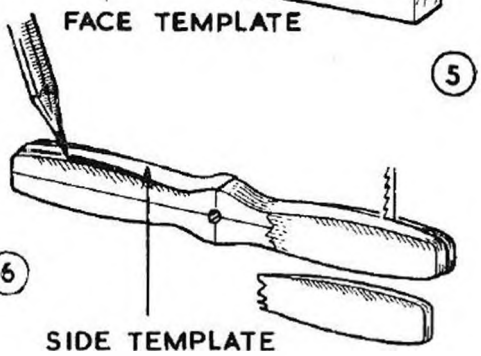

6

7

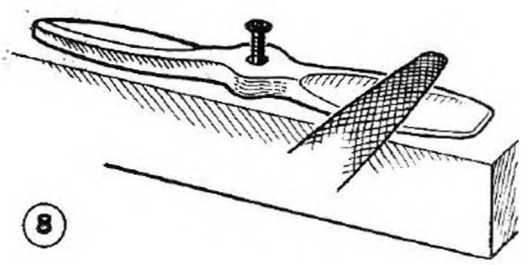

8

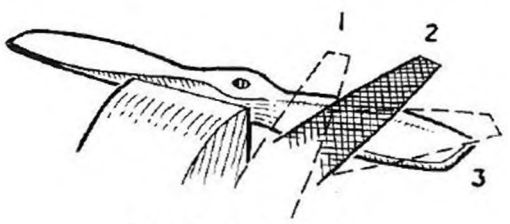

RASP STROKES

9

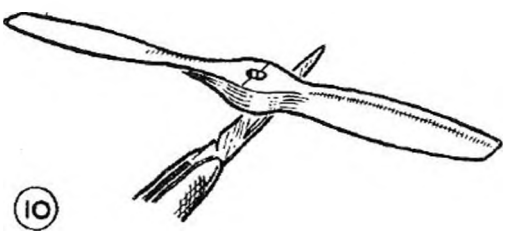

10

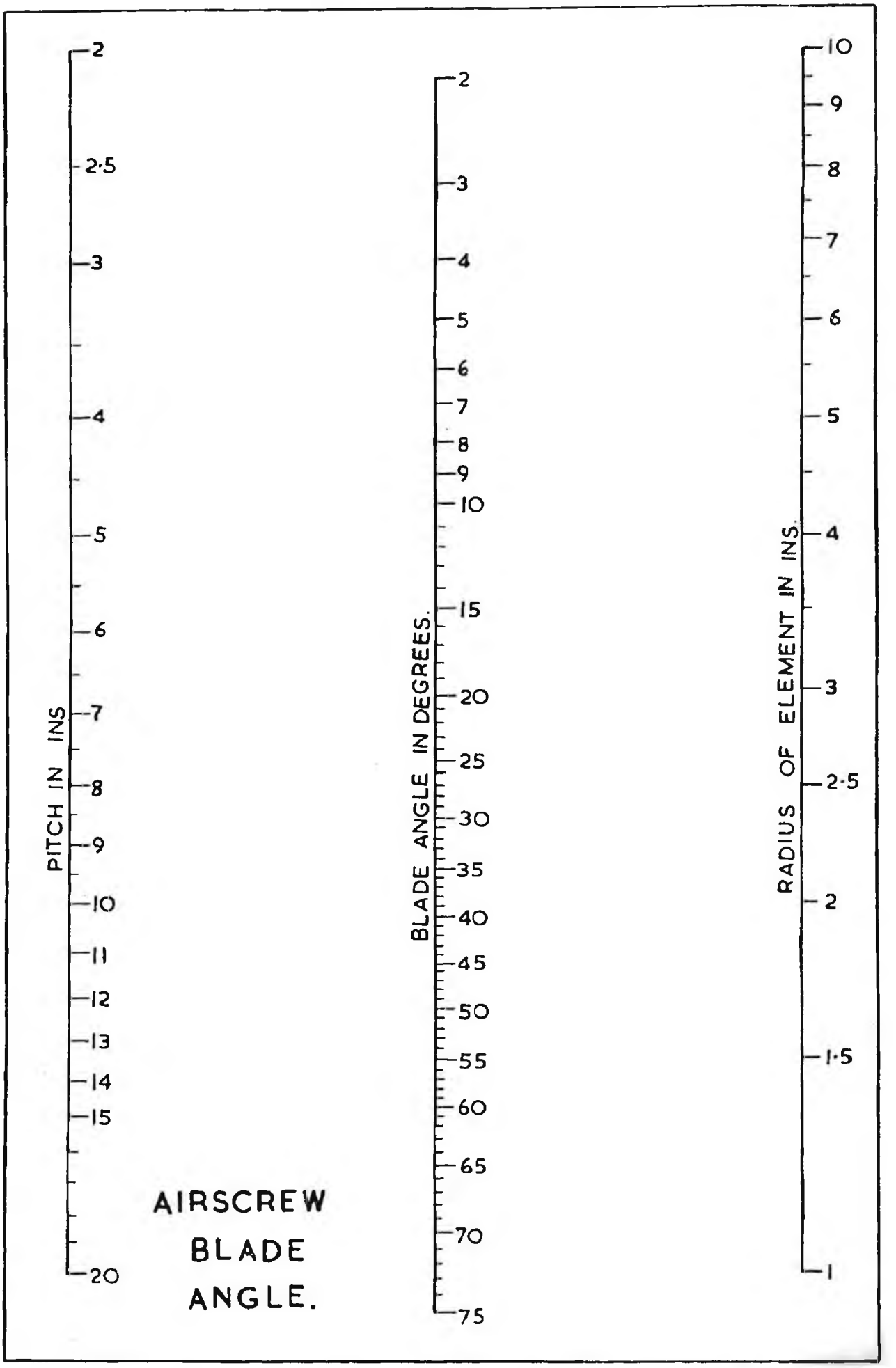
PITCH IN INS
2
2·5
3
4
5
6
7
8
9
10
11
12
13
14
15
20
AIRSCREW
BLADE
ANGLE.
BLADE ANGLE IN DEGREES.
2
3
4
5
6
7
8
9
10
15
20
25
30
35
40
45
50
55
60
65
70
75
RADIUS OF ELEMENT IN INS.
10
9
8
7
6
5
4
3
2·5
2
1·5
1

strokes across the blade. This you will find removes the grooves cut along the blade by the rasp in the earlier stages. In some cases the wood will tend to "rough up" when worked in one direction and here you should reverse the direction of your strokes which will solve the problem. After a little practice you will find it possible to vary the depth and angle of cut to a surprising degree. Leave just enough excess wood for final finishing on your lower surfaces and then commence with the upper face. Even greater care should be taken with the carving of these, and constant reference should be made to your blade section. Better still, cut templates for the upper surface and use these as a check. With Payne type airscrews with their parallel blades it is possible to cut a mild steel template of the upper surface and use this as a tool for final shaping. Bring down the thickness of your blade with the rasp until they have approximately 1/64th inch of excess wood on both surfaces and then bring out the sandpaper. Use either coarse or medium grain at first according to the nature of the wood, and finish with a fine in the usual way. Check airscrew for balance on a knife edge (as shown in Fig. 10) before the sanding is done and make several more checks as you progress with finishing. Use a block when sandpapering and do not forget that sandpaper wrapped around a wooden dowel is handy for the acute curves near the hub. Should you slightly overstep the mark on one blade by taking an edge too thin, sand the offending edge lightly which will of necessity mean narrowing the blade slightly; take a paper pattern, transfer it to the opposite blade and sand to match. This makes it the best of a bad job, but the obvious is of course *carve with care* !

Checking the blade section, final sanding and balance all go hand in hand, and you should progressively work these three tasks together until your final airscrew is perfect in all respects.

The importance of attaining the correct section particularly on the upper surface cannot be over emphasised. During practical tests for "Engine Analysis" a slight inaccuracy in section produced a difference of 5 ozs. in thrust between two otherwise identical airscrews. Owing to the narrow chord of the average airscrew, there is a tendency to overestimate the depth and leave the blades too thick.

There are many and various finishes that may be applied: French polishing, dope, both coloured and plain, varnish and many others. We, who are always making them because we are always breaking them, do, however, give ours a healthy finish with ordinary wax polish. It produces a good surface and is not affected by hot fuels which is a virtue now that most of us are using them.

We hope that these few notes will be of assistance to would-be prop carvers and would mention that for control-line work a certain amount of individual mass production is possible, especially when one is only breaking and making one particular type of airscrew. We cut our templates from thin zinc or aluminium and produce six or more blanks at a time and then spend an evening enjoying a jolly good carving session. It is amazing how one speeds up production after a little practice. One an hour from carving to final balancing and finishing is quite easy to accomplish. If only it took as long to break one !

POPULAR KITS IN G/A FORM

The following pages are devoted to small G/A drawings of some of the more popular kits on the market, together with notes on dimensions and performance, for the benefit of intending builders who may be a little baffled by the wide variety available, and yet lack that peculiar kind of courage which insists on the shopkeeper opening up every box in the shop before making a purchase.

On the right Keil Kraft designer, Bill Dean, lets go one of the ubiquitous Slicker family in the Irish Nationals. Super Slicker shown below is 60in. in span, and intended for Mills 2.4, K.6, E.D. Mk. III and similar engines. Other little Slickers are available from Slicker Mite (32in. span) upwards. Slickers follow the American pylon trend and have a very close affinity to such Shulman designs as Zoomer. Regular contest winners all round the country.

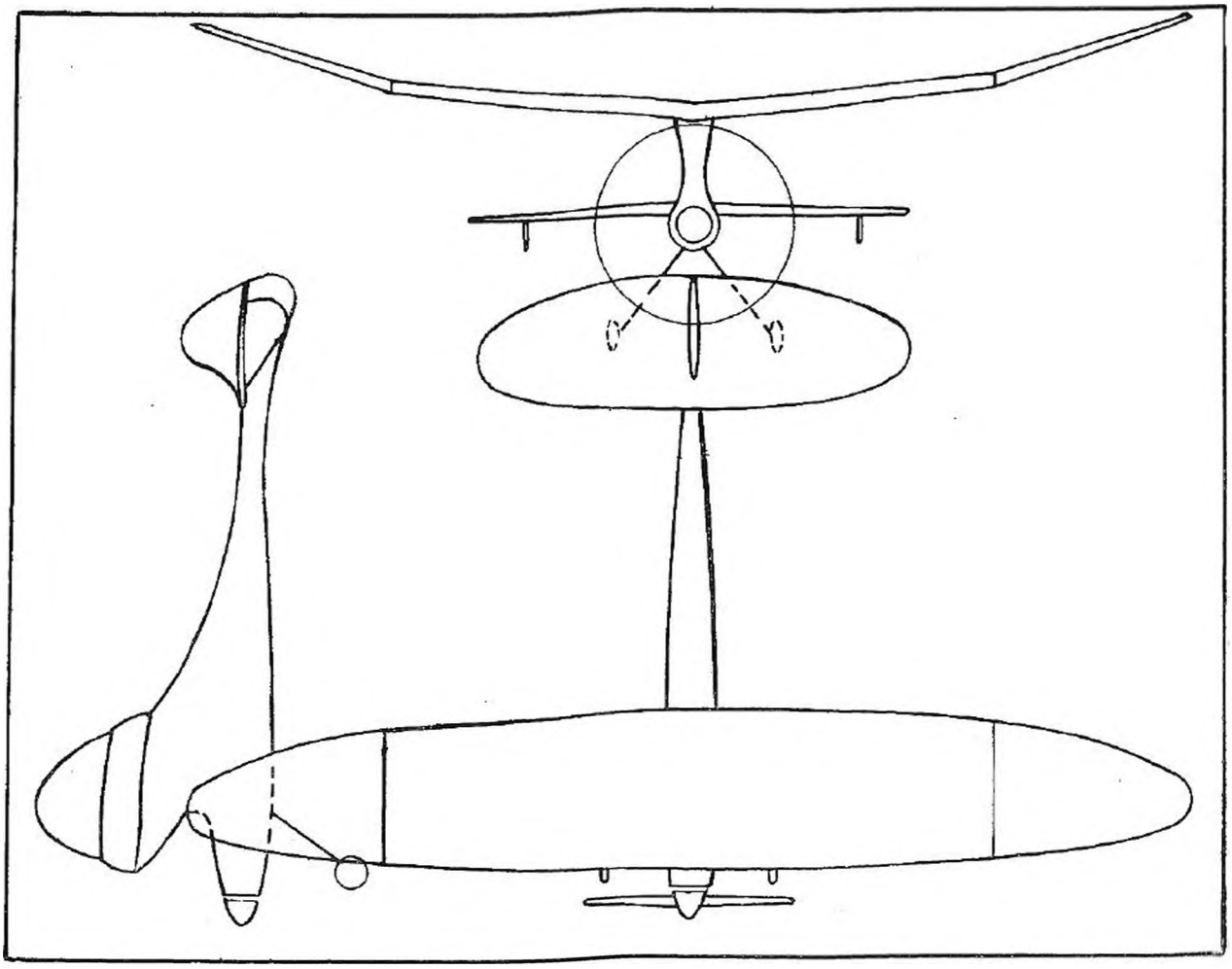

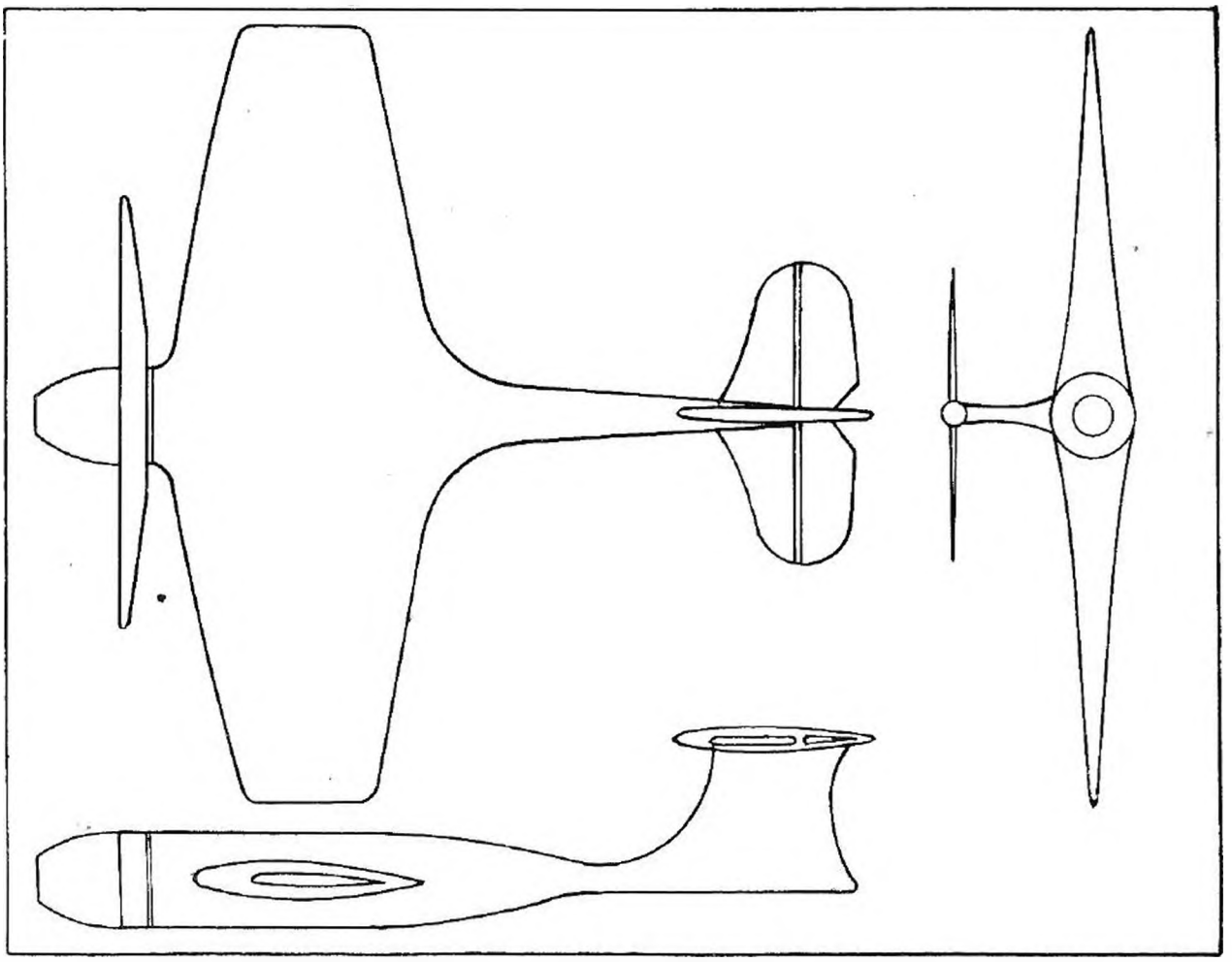

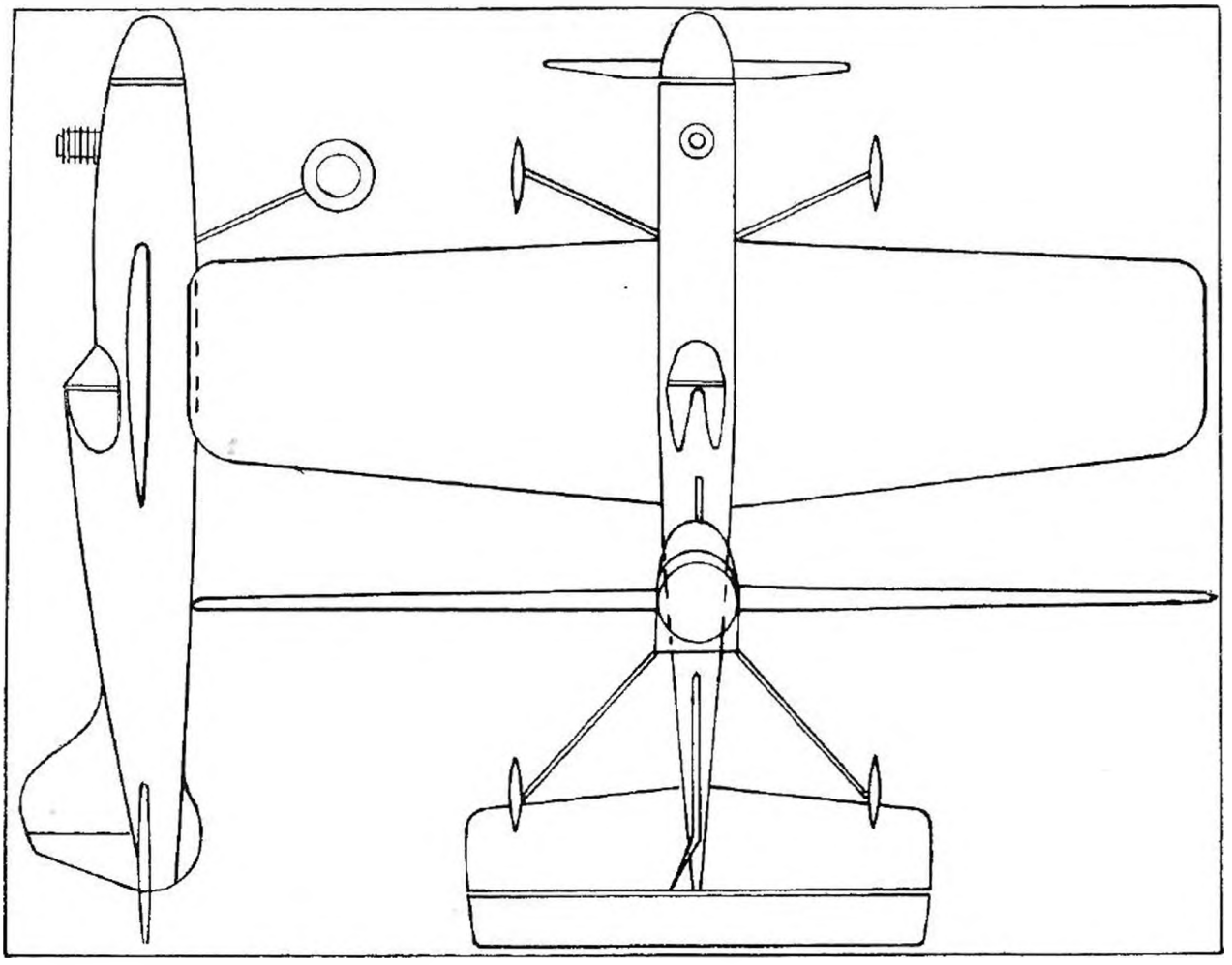

Three Control Line Kits

Top left : STINGRAY—futuristic speed model featuring Mills 1.3 c.c. marketed by Watkins as a plan-pack. Ingenious layout locates engine as sidewinder imbedded in wing ; tank and all controls likewise imbedded with extensions for vital operations. Very neat, very fast and just the thing for flyers out of the beginner stage.

Bottom left : MERCURY MAGNETTE—first kit put out by Henry J. Nicholls, who is also designer. Owes something to American influence, Hot Rock and the like, which is a good thing. Stoutly constructed thoroughly practical beginner's or intermediate stunt model. Takes a lot of hard knocks. Suitable for E.D. Mk. III, or Comp Special, Allbon, or others in that size. No vices—easily repaired.

Below : SABRE—advanced trainer and speed model by Halfax. A Trevor London design that gives the builder no chance to spoil the job by slap-happy assembly. Designed for a wide range of engines from Mills 1.3 c.c. to 2.5 c.c. engines. With hotter motor really does move ; but quite tractable with less powerful kinds, and suitable for the man who has flown before.

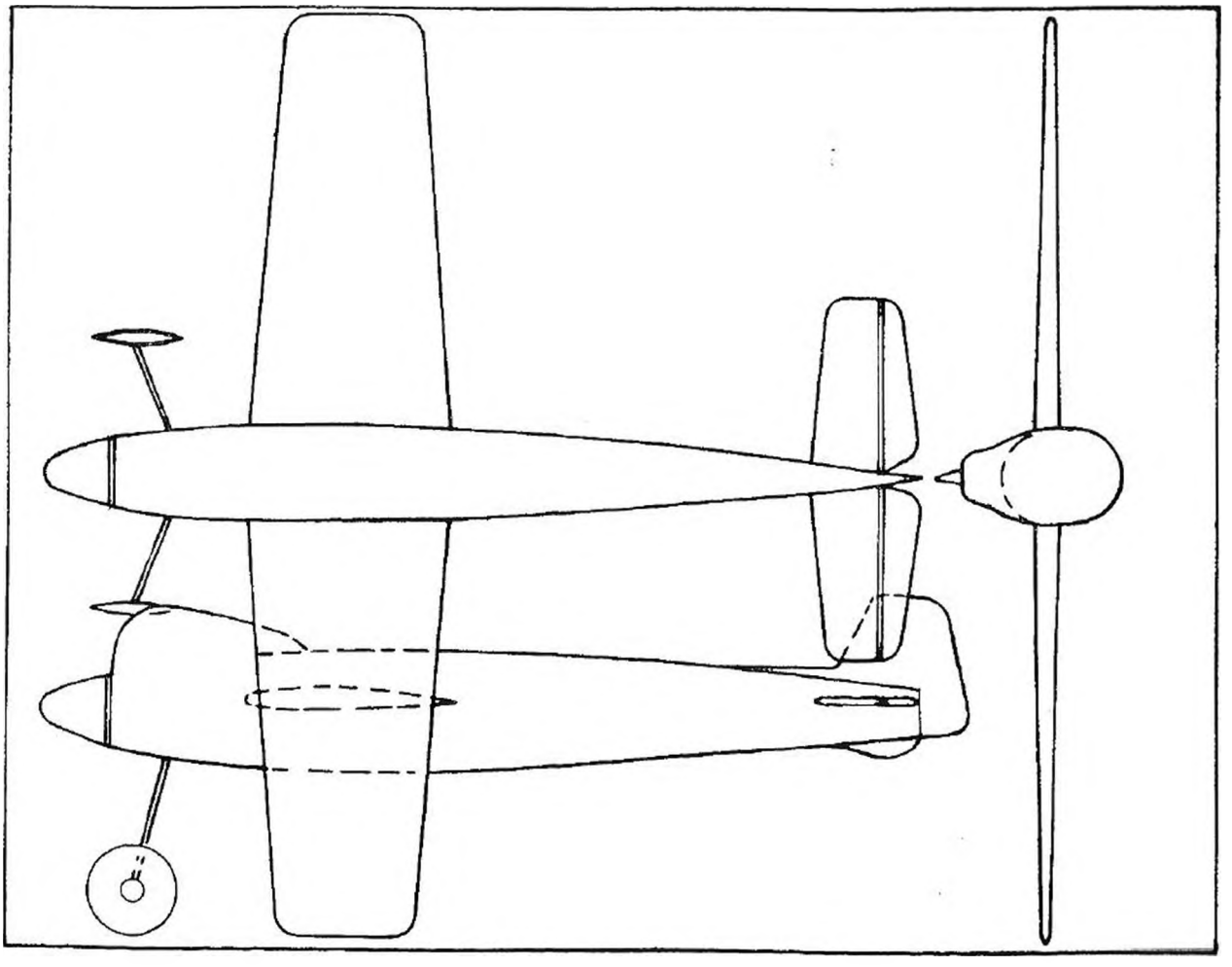

Right : SCOUT—attractive little biplane by Keil Kraft, that is not adverse to a stunt or too—will not do the "whole works," but is a good follow-on model for those who have built a simple trainer, such as Keil Kraft's own Phantom or any other "circuits and bumps" model. Span is 20in.

Below : BANDIT—recent addition to Keil Kraft free flight range. Intended for Mills Mk. II 1.3 c.c. engine, it climbs like a rocket. Easy construction with sheeted nose, mainplane and tail leading edges for strength. Flat wing undersurfaces. Fuselage W-braced. Span 44in. Length 28in.

Bottom right : SOUTHERNER MITE—Baby Keil Kraft free flighter for the under 1 c.c. engines. Equally suitable for new Mills .75 c.c. or the well tried Amco .87 c.c. These little fellows take no longer than a rubber duration job to build ; touch down very lightly ; and are generally easy on the pocket as well as pleasing to the eye.

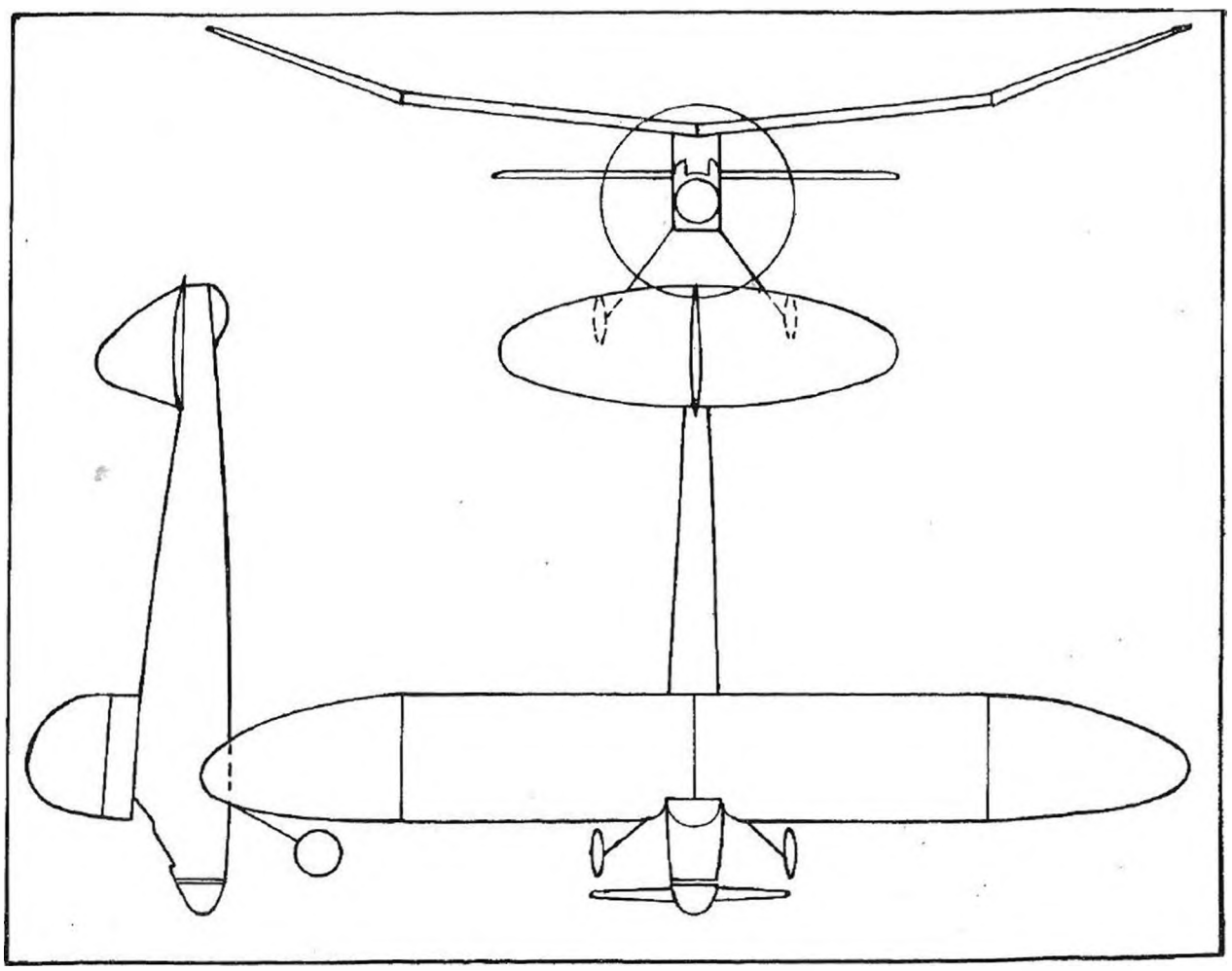

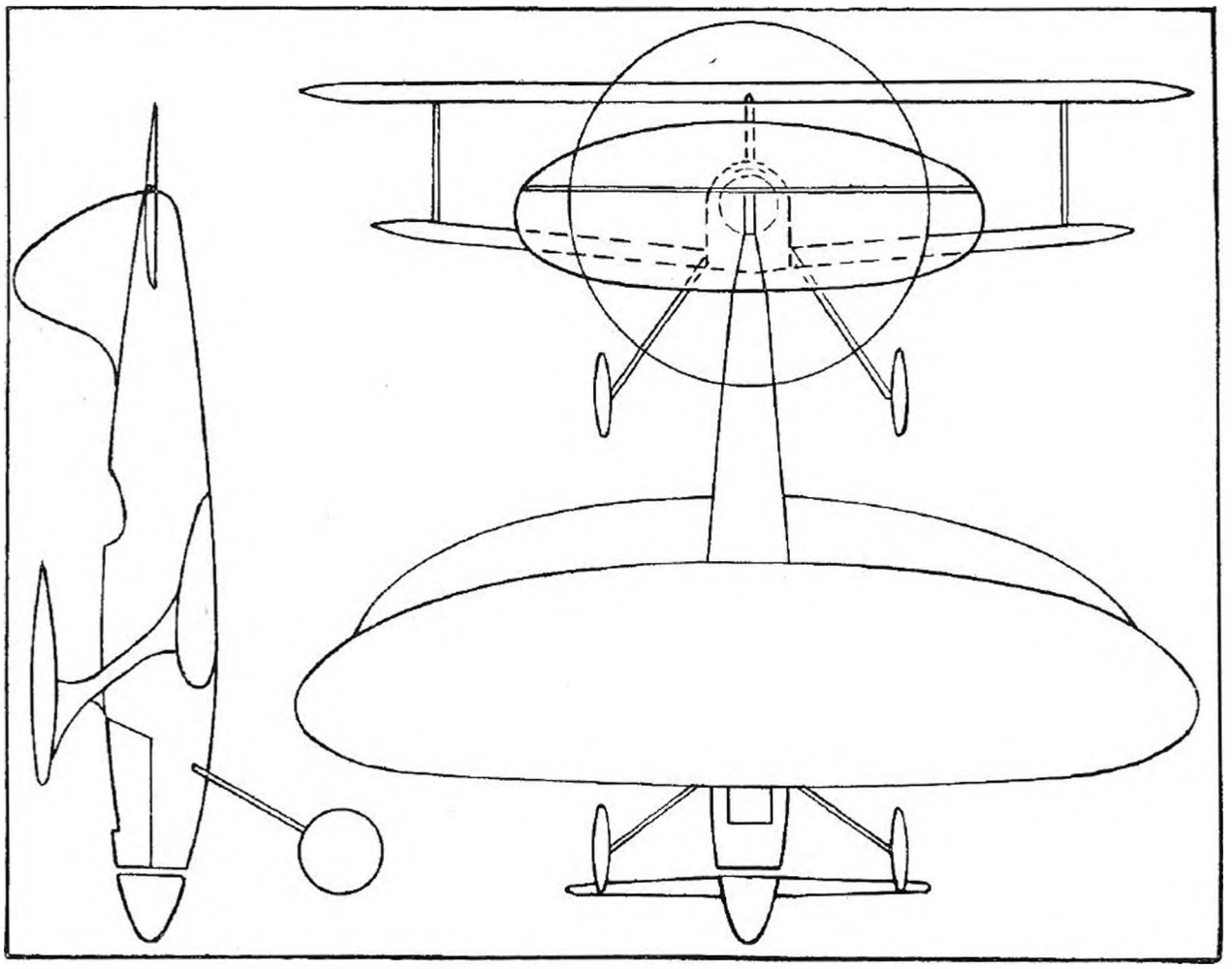

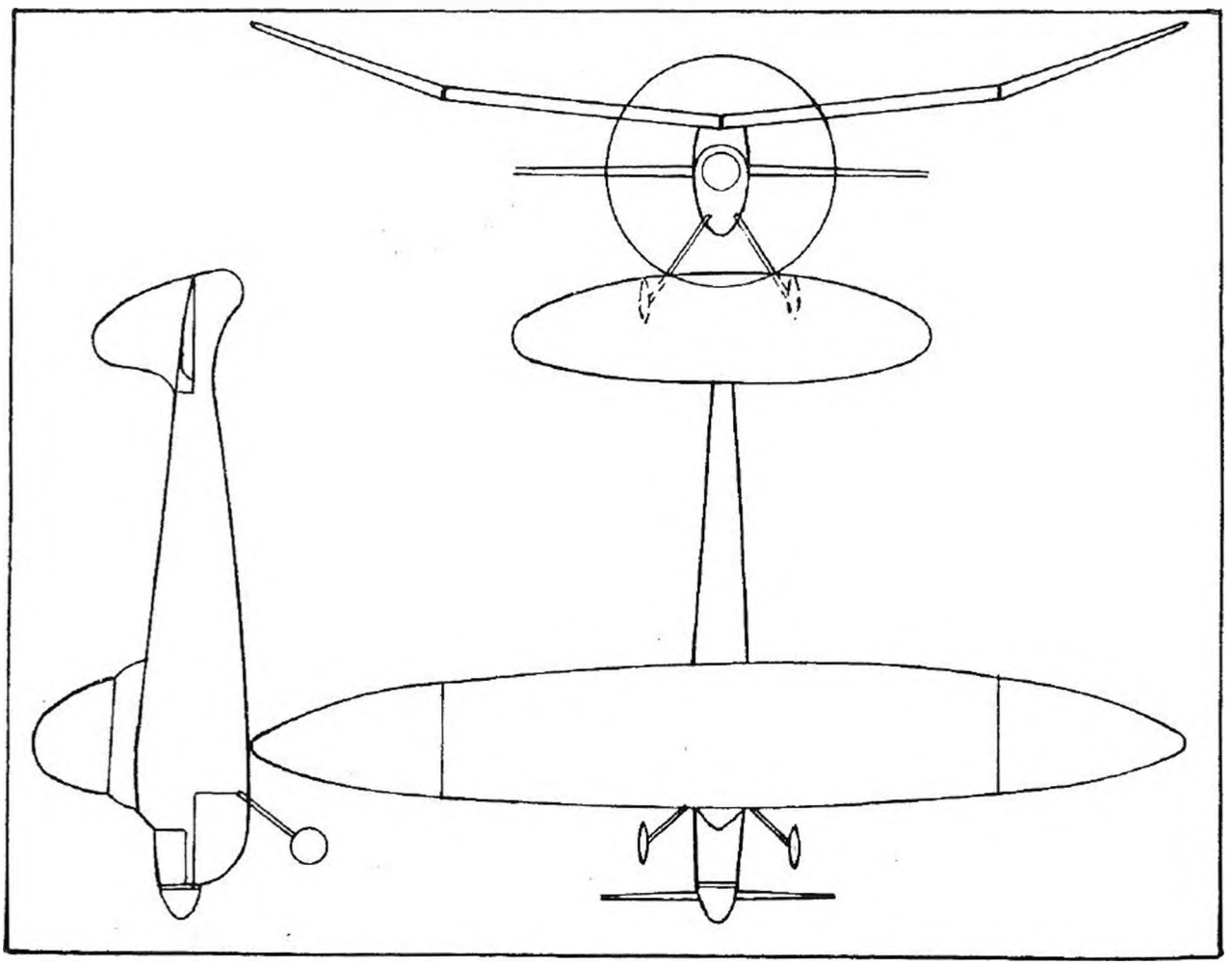

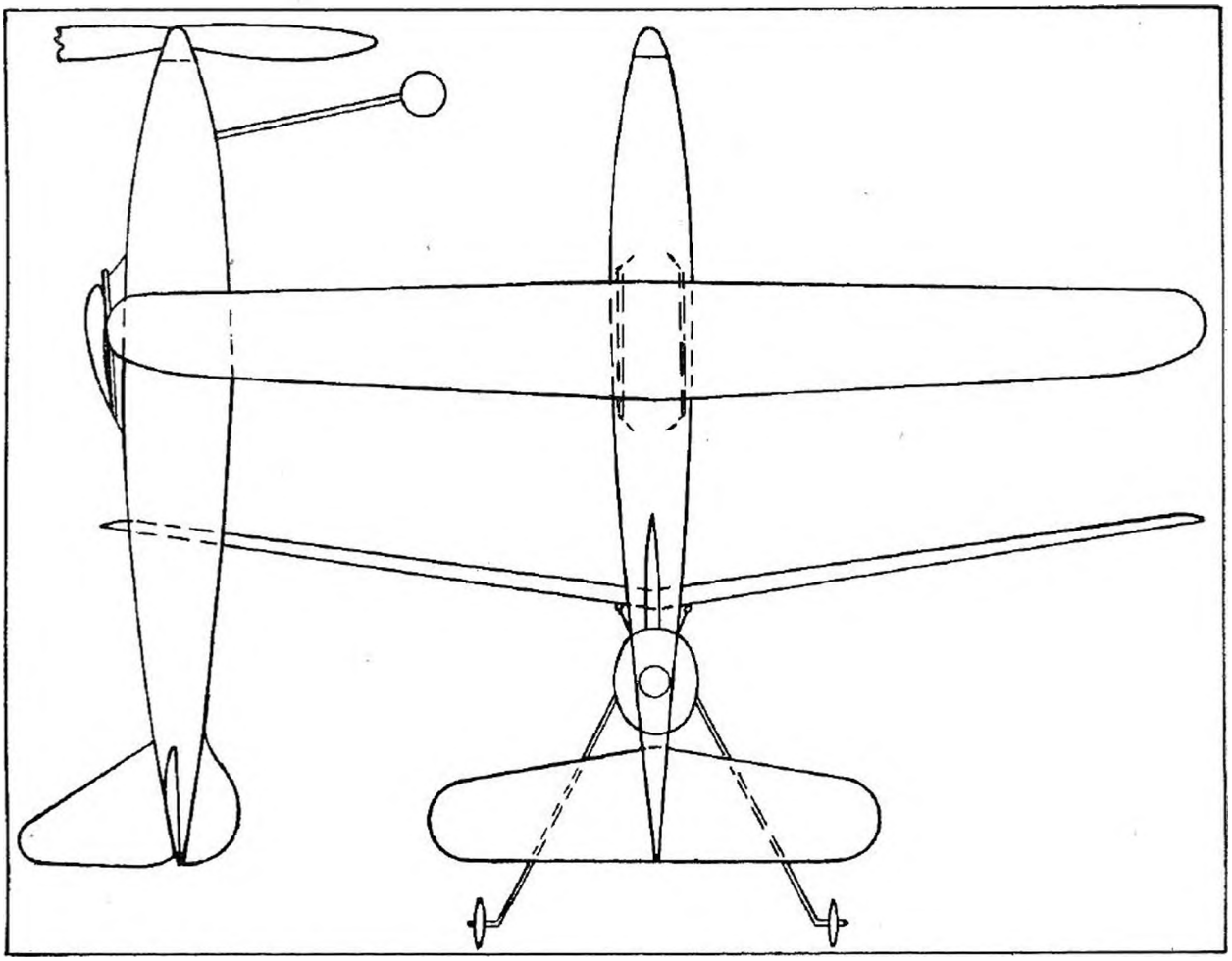

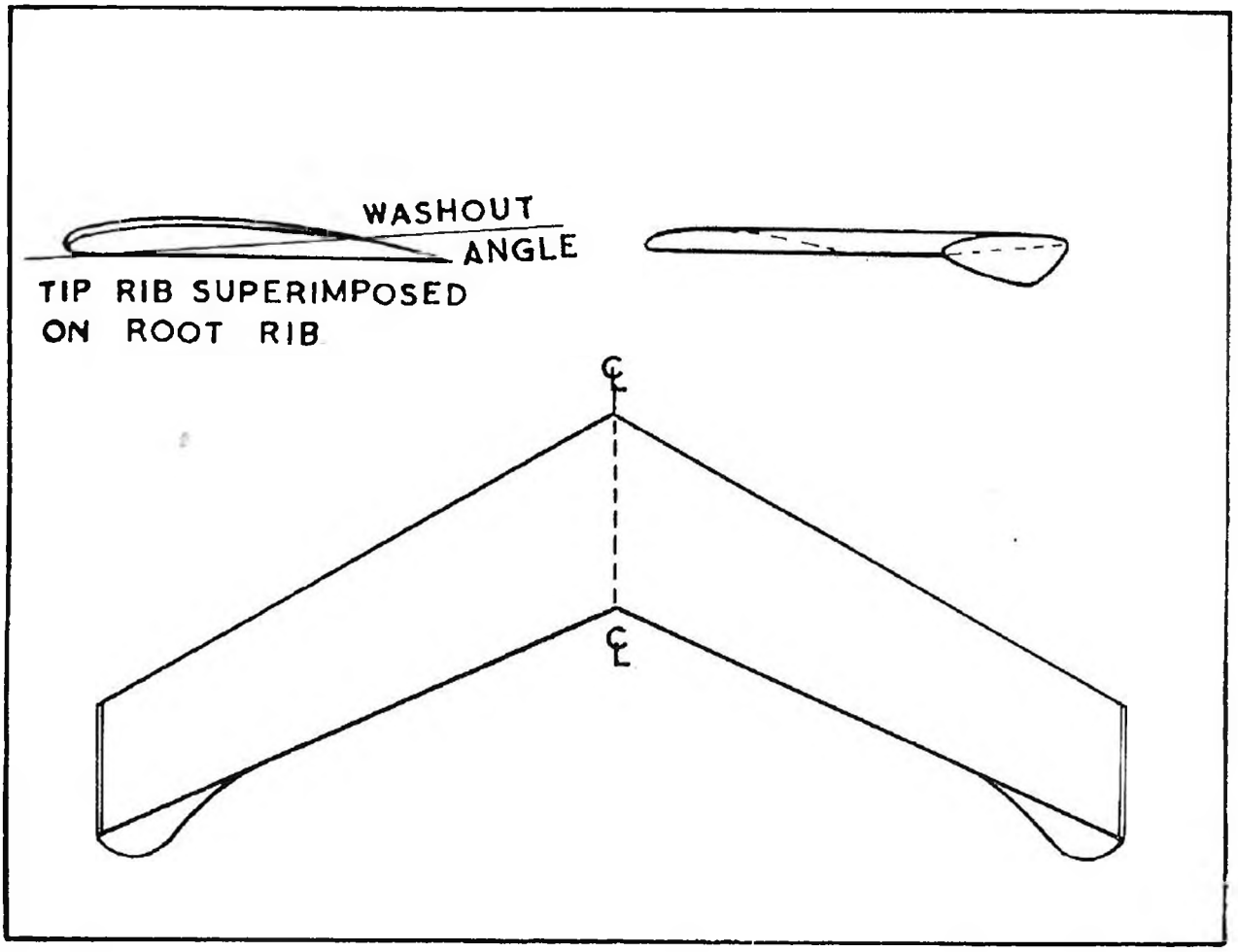
WASHOUT
ANGLE
TIP RIB SUPERIMPOSED
ON ROOT RIB
℄
℄

Top left : FLYING MINUTES—Len Stott, Halfax chief, has taken this Stott-Lees Wakefield model more miles than probably any other unchanged design—twice to the States to our knowledge, leaving out odd trips to France, Ireland and all round the U.K. In spite of the years, it is still amongst the best of the bunch, particularly for budding enthusiasts, who will find it helps them along the experts' road. Span 50in. Power 18 yds. ¼in. rubber in 12 or 14 strands.

Bottom left : SUNBEAM—flying wing glider by Warneford—simple but efficient that may well win many a specialised contest for its flyers. One of the oldest model aircraft firms, we are glad to see them back, and expect them to take quite a part in future trends. Sunbeam is 30in. span, 140 sq. in. wing area, with 30° sweepback. Aerofoil is Clark Y, and washout angle 7°.

Below : RAPIER—another Halfax " weapon " that is as sharp after thermals as the name suggests. Very simple construction puts this model within the reach of almost any builder—and gives a very fair chance of contest successes—certainly many pleasant flights. Moderate American influence keeps it efficient without losing good appearance associated with British design. Span is 48in., wing area 2¼ sq. ft., weight 18oz. For 1.5 to 3.5 c.c. diesels ; 2.5 to 4.5 c.c. petrol.

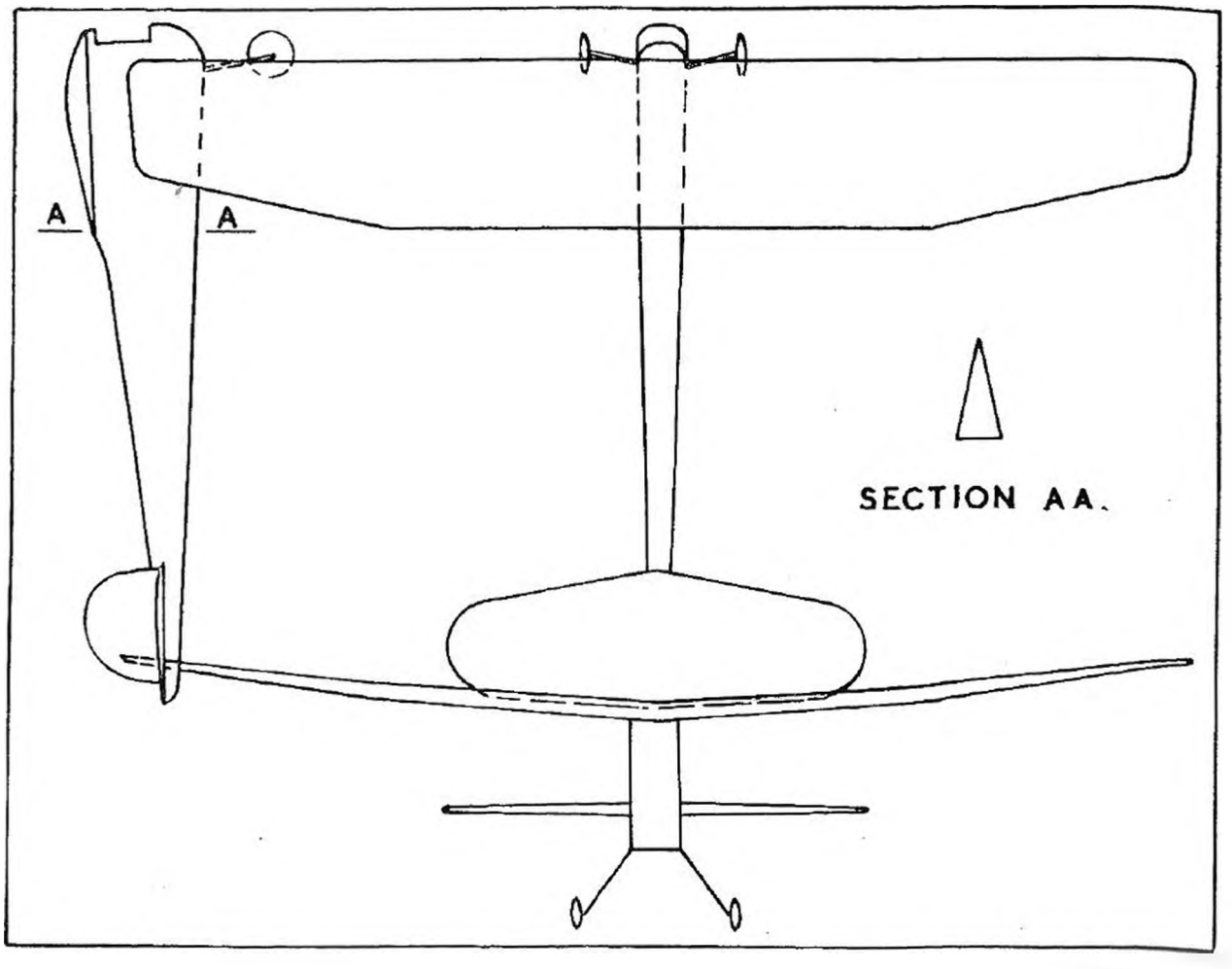

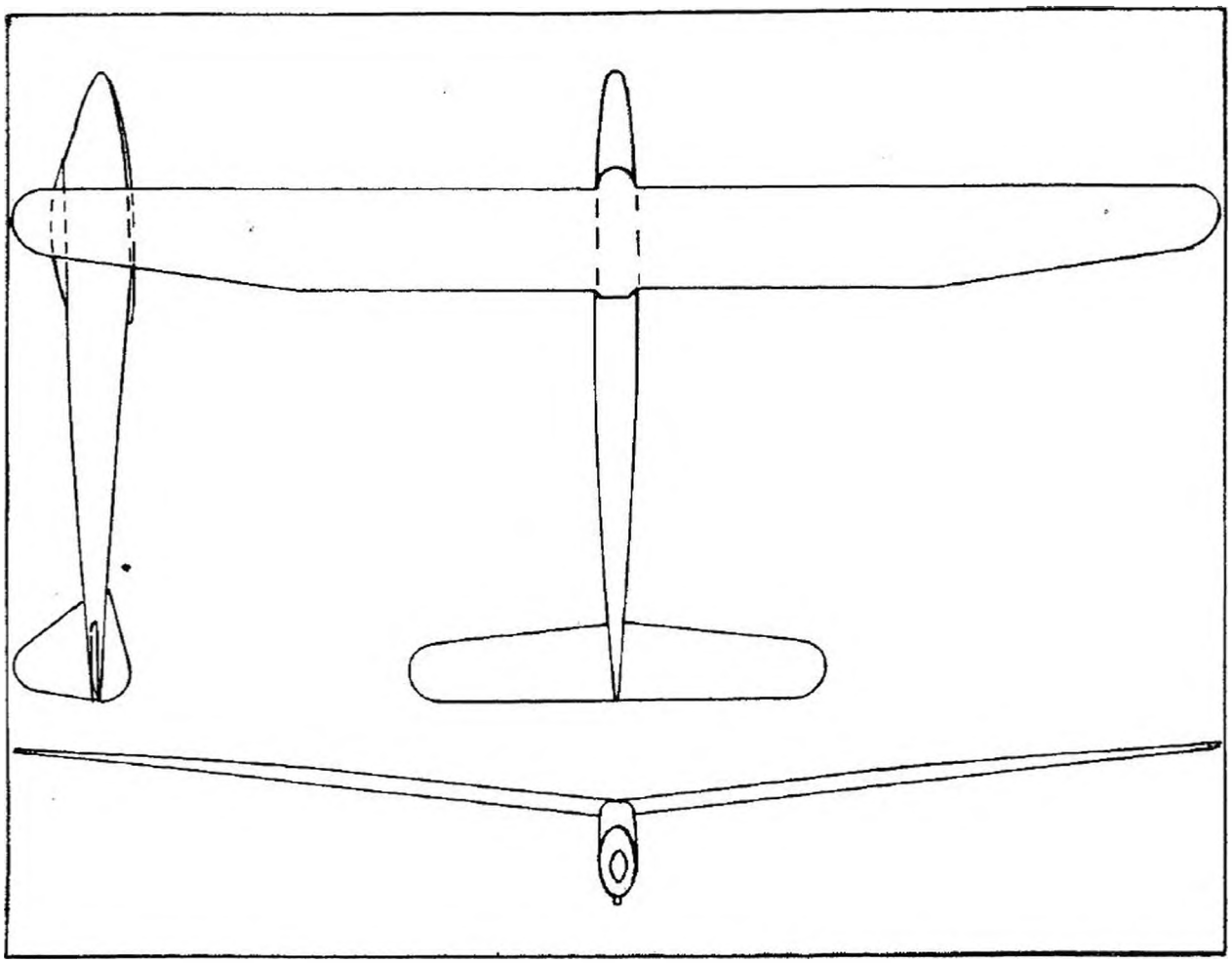

ALBATROSS—Successful soaring glider in the Halfax range, that has a good run of contest successes behind it, as well as grace of line to commend it. Streamline design is easier than it looks with this kit.. Span is 5ft. 6in., and once made up Albatross should last the season out—or o.o.s. No freakish devices—straight dihedral, small underfin, usual skid, in fact nothing to reduce strength or go wrong.

INDEX

Contest winners and runners-up, bibliography, glossary and items listed in tables have not been indexed individually here.

Complete List of over 200 plans available on request from Aeromodeller Plans Service

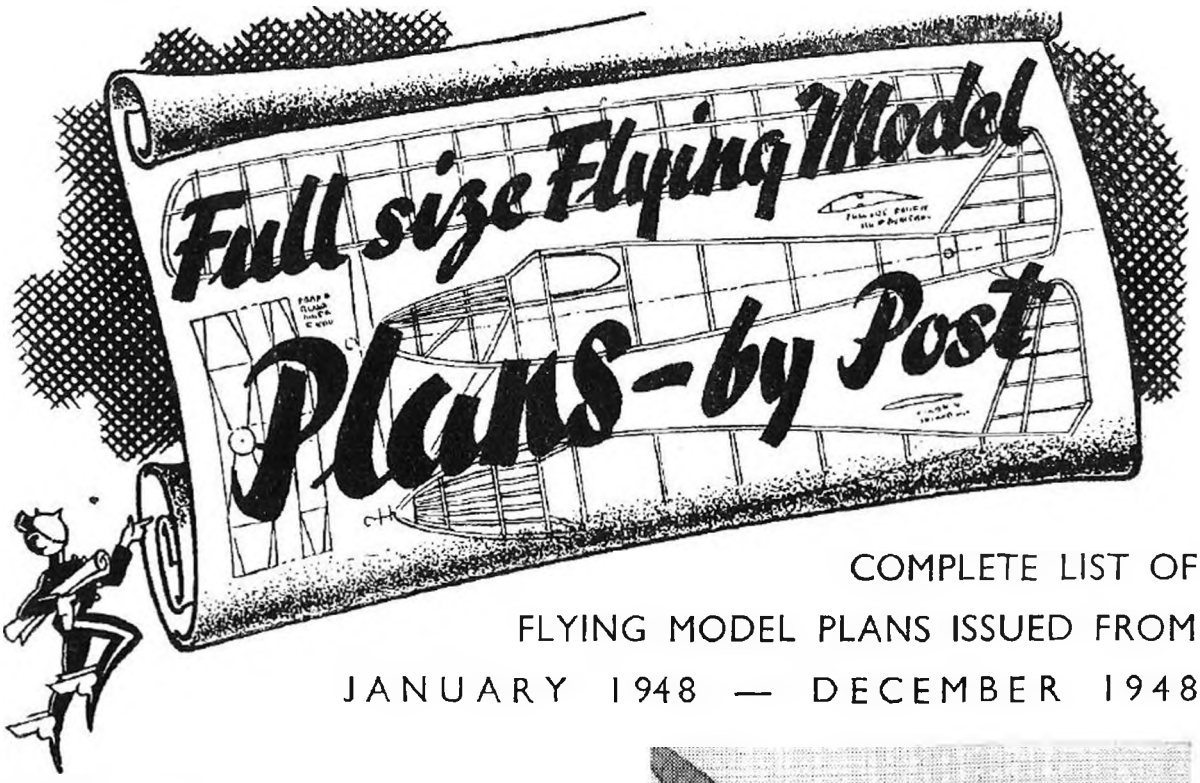

COMPLETE LIST OF FLYING MODEL PLANS ISSUED FROM JANUARY 1948 — DECEMBER 1948

GLIDER

G/282. **1947 LIGHT WEIGHT GLIDER.** By Mick Farthing. Simple box fuselage, parasol wing model. Span 34ins. 3/-

G/283. **SUNSPOT.** By Ron Yeabsley. Simple outsize ultra-weight glider (weight 2¾ lbs.). Span 10ft. 8/-

G/206. **IOLANTHE II.** By N. M. Braun. Elliptical fuselage high performance model with "Thermic" wings. Span 72in. 5/-

G/298. **BUZZARD II.** High fin, swept forward wing, tailless glider. Span 48in. 2/-

G/302. **SAINT.** "Flying Suitcase" glider, twin fins, parallel chord wings, elliptic tips. Span 51in. 3/-

G/304. **NIMBUS.** By P. E. Norman. Elliptical sheet covered fuselage, semi-elliptical high wing sailplane. Span 96in. 7/-

G/306. **THERMALIST I.** By R. Minney. Largest size FAI sailplane. Cabin slabsider, chord wings, elliptical tips. Span 11ft. 5½in. 12/6

SCALE AND SEMI-SCALE RUBBER

FSR/297. **FOKKER D VII.** By D. R. Hughes. Fin flying version of the famous World War I plane. Span 21in. 2/-

RSS/268. **WINGED SERPENT.** By J. L. Roberts. Low wing, twin fin model with 4 bladed airscrew. Span 35in. 3/-

RSS/301. **ARIEL.** By H. E. Hervey. Mid wing, open cockpit, semi-scale model with outstanding performance. Span 31½in. 3/-

RUBBER DURATION

D/281. **G.H.27B.** By G. W. W. Harris. Shoulder wing duration, design by leading contest flier Can also be flown as glider. Span 42½in. 3/-

D/288. **AEROMODELLER WAKEFIELD.** Diamond fuselage, pylon, peg-leg contest type. Span 40in. 3/6

D/287. **LADYBIRD.** By H. J. Pridmore. Elegant unstrutted biplane duration, slabsider. Span 40in. 3/-

D/294. **WARRING'S LIGHTWEIGHT.** By Ron Warring. Simple shoulder wing style contest model in typical Warring style. Span 38½in. 3/-

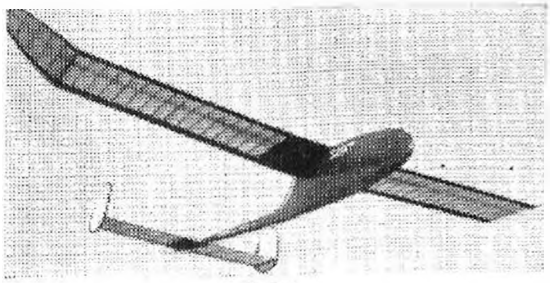
Saint

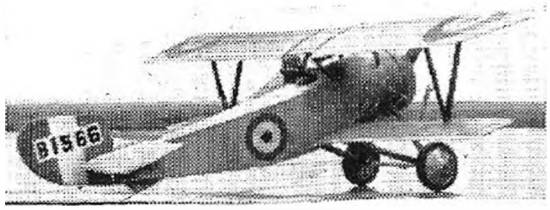

Bishop's Nieuport

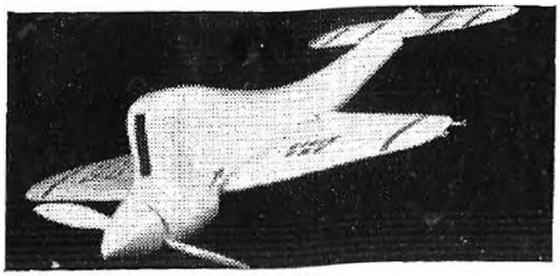
Speed King

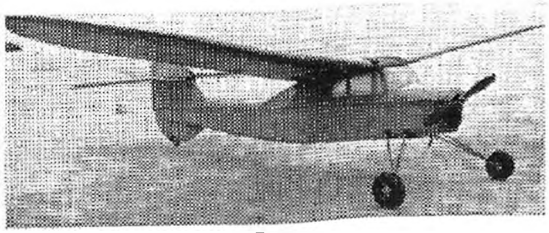
Eros

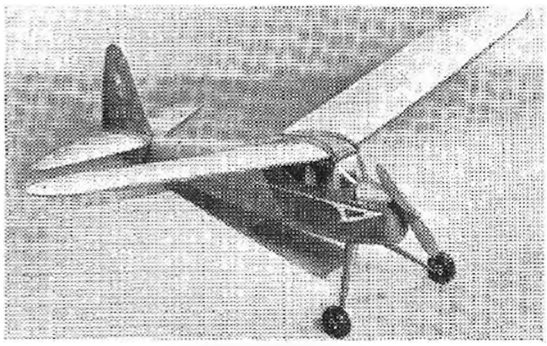

Ethereal Lady

Chipmunk

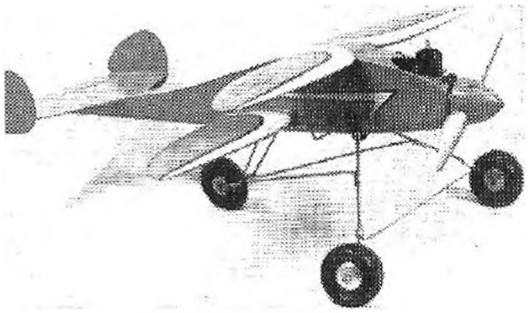

Tyro Trainer

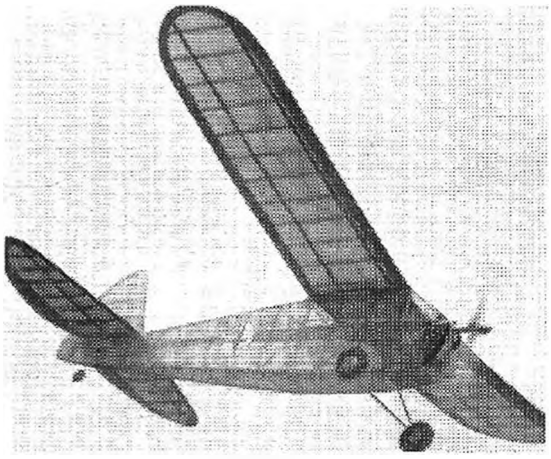

Shrimp

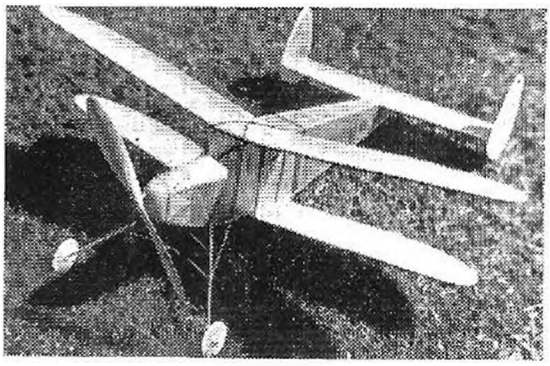

Ladybird

INDOOR

I/278. **THISTLEDOWN.** By Bob Copland. A 5½ minute class "A" R.T.P. Model. Tissue and microfilm covered. Span 21½in. **2/-**

JETEX

J/292. **ZEPHYR.** By H. E. Hervey. High wing simple duration model for "Jetex 200" solid fuel units. Span 34½in. **2/-**

J/293. **METEOR IV.** Twin engined scale model for two "Jetex 100" units—most realistic in flight. Span 21½in. **2/-**

PETROL

PET/280. **EROS.** By J. W. Coasby. Robust high wing cabin model of scale appearance. Diesels 4-5 c.c. Span 84in. **7/-**

PET/289. **ELFIN MK. II.** By H. J. Butcher. Simple miniature high pylon twin fin design, Diesels .5-.9 c.c. Span 29in. **3/-**

PET/299. **OVERLANDER.** By A. Anastasiou. Diamond fuselage cabin pylon model, polyhedraled wings. Span 72in. **7/-**

PET/291. **ETHEREAL LADY.** By V. E. Smeed. Cabin contest power model, elliptical fuselage, parallel chord wings with elliptical tips for 1.3-2.5 c.c. engines. Span 48in. **3/-**

PET/300. **SHRIMP.** By G. D. Pike. High wing slabsider, cabin model parallel chord wings. For the new ultra small diesels., 2.5 c.c. Span 25½in. **2/-**

CONTROL LINE

C/L/284. **SPEED KING.** By Walter Musciano. Speed control liner by U.S. ace. Streamlined, dolly take-off, 100 m.p.h. for 6/10 c.c. engines. Span 19in. **3/-**

CL/295. **TYRO TRAINER.** By Walter Musciano. Stout solid wing sheet fuselage biplane speed trainer with take-off dolly. Diesels 3.5-5 c.c. Span 22½in. **2/-**

CL/303. **CRACKERJACK.** Midwing U.S. type sidewinder, stunt design with drop off u/c. For 2-3½ c.c. diesels. Span 32in. **3/-**

CL/307. **FOKKER TRIPE.** By Walter Musciano. Unusual scale triplane control liner for 2-3½ c.c. engines. Span 23½in. **3/-**

FLYING SCALE PETROL

FSP/285. **BISHOP'S NIEUPORT.** By L. C. Bagley. Old timer biplane (⅛th scale) with special stabilising rudder. Span 41½in. **5/-**

FSP/290. **D.H.C.-1. CHIPMUNK.** By J. M. Greenlands. Masterpiece of low wing scale design for 1.3-2 c.c. diesels. Span 51½in. **5/-**

FSP/305. **SOPWITH PUP.** By G. E. Fisher, ⅛th scale World War I biplane, that flies like its prototype. Span 40½in. **5/-**