# CHAPTER 1

## AIRPLANE ALPHABET

THE first step toward becoming a model airplane builder is to be able to recognize and name every part of a model. Some beginners know the name of a part but are unable to locate it on a model, while others find themselves in the predicament of knowing a part by sight but not by name. The latter problem presents the greater difficulties, as all building instructions refer to parts by their correct names. This is true, not only here, but in all magazines, manufactured kits and other model books where plans are given, so it is most important to master names of parts if you hope to be able to read plans.

This chapter has been prepared as a solution for such problems. Whenever you require the name of a part, look for it here. Two illustrations have been provided to cover both stick and scale models. When finding a name, the illustration showing the type of model you are building should be consulted. As will be seen, each part is designated by a letter which appears in its alphabetical order in the listing below. After each letter appears the proper name of that particular part, together with the chapter in which are given the building instructions for it.

If you wish a definition for it, the name may be looked up in the glossary of terms. If you wish the definition covering that particular part on a real airplane, it can be found in the aviation dictionary. It must be remembered, however, that all the parts appearing on a model airplane do not necessarily belong to real planes, in which case they would not appear in the aviation dictionary.

### STICK MODELS: FIGURE 1

| LETTER | NAME | CHAPTER |
|---|---|---|
| A | Propeller | 9 |
| B | Washers | 6 |
| C | Propeller Bearing | 6 |
| D | Propeller Shaft | 6 |
| E | Can Hook | 6 |

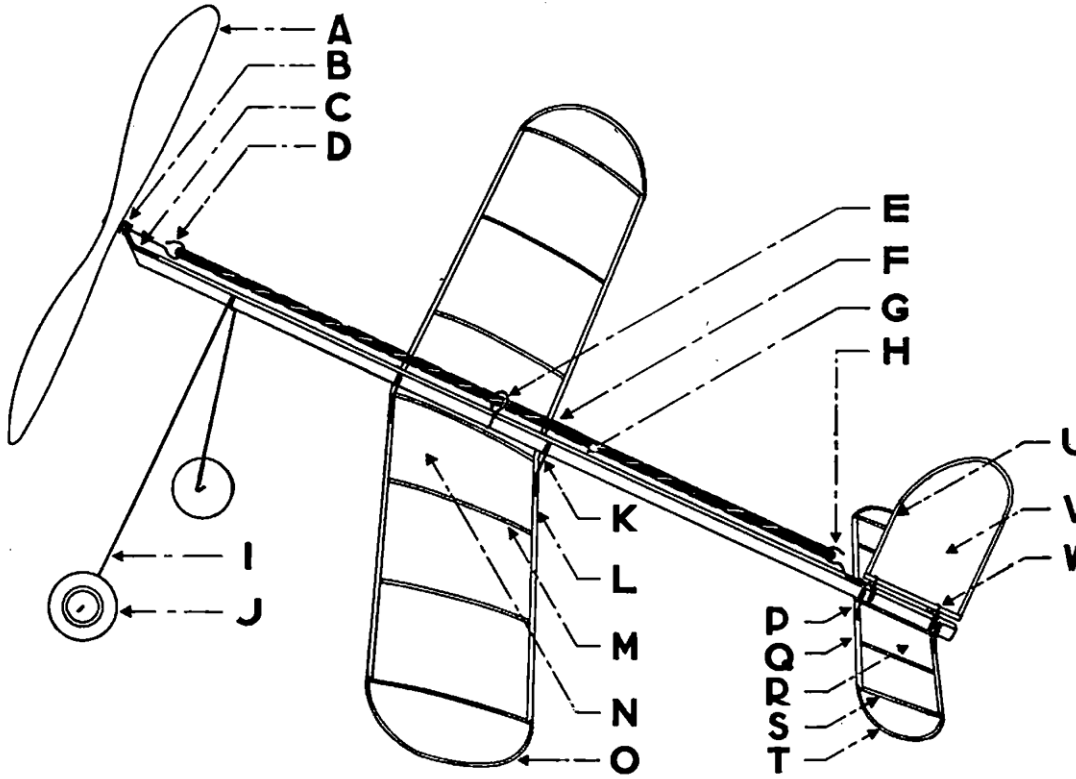


FIGURE 1. STICK MODELS

## AIRPLANE ALPHABET

| LETTER | NAME | CHAPTER |
|---|---|---|
| F | Rubber Motor | 12 |
| G | Motor Stick | 12 |
| H | End Hook | 6 |
| I | Landing Gear | 10 |
| J | Wheel | 10 |
| K | Wing Clip | 6 |
| L | Trailing Edge | 7 |
| M | Wing Rib | 7 |
| N | Wing | 7 |
| O | Wing Tip | 7 |
| P | Elevator Clip | 6 |
| Q | Leading Edge | 7 |
| R | Elevator | Any Stick Model Plan |
| S | Elevator Rib | 48 |
| T | Elevator Tip | 7 |
| U | Leading Edge | 7 |
| V | Rudder | Any Stick Model Plan |
| W | Rudder Clip | 6 |

## SCALE MODELS: FIGURE 2

| LETTER | NAME | CHAPTER |
|---|---|---|
| A | Fuselage | 8 |
| B | Instrument Board | 15 |
| C | Windshield | 15 |
| D | Control or Joy Stick | 15 |
| E | Pilot's Seat | 15 |
| F | Leading Edge Spar | 7 |
| G | Inner Wing Spars | 7 |
| H | Wing Tip | 7 |
| I | Wing Rib | 7 |
| J | Trailing Edge Spar | 7 |
| K | Cockpit | 15 |
| L | Fin Outline Stringer | Any Flying Scale Model Plan |
| M | Fin | Any Flying Scale Model Plan |
| N | Tail Braces | Any Flying Scale Model Plan |
| O | Rubber Motor | 12 |
| P | Fuselage Stringers | 8 |
| Q | Fuselage Formers | 8 |

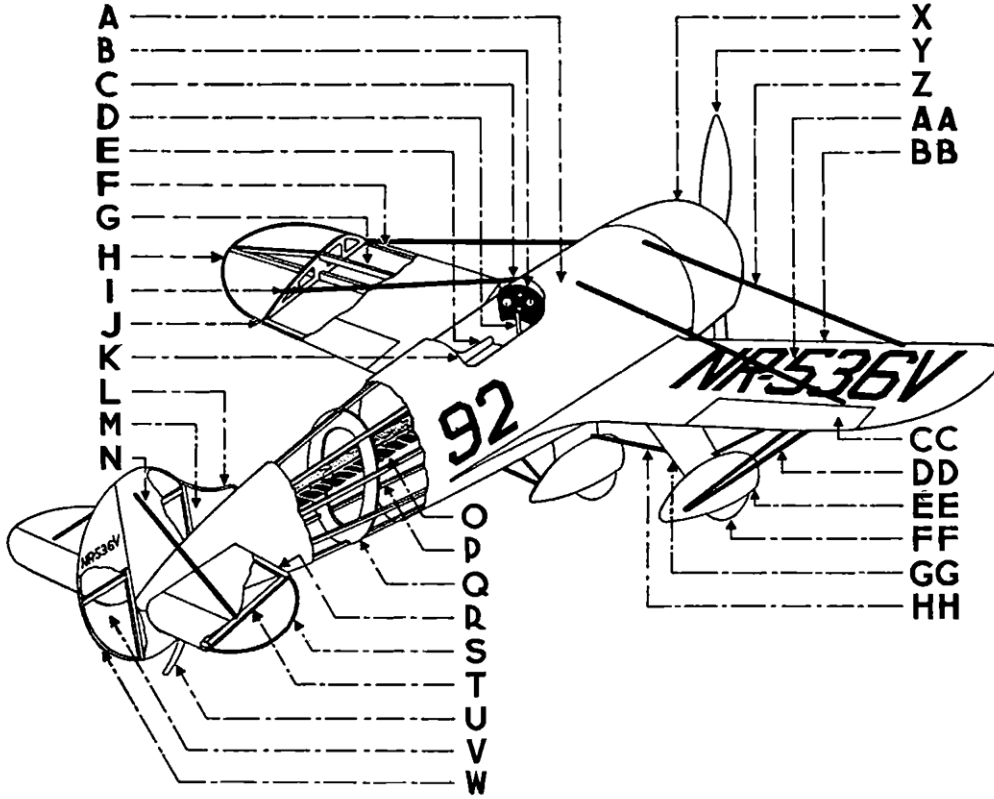


FIGURE 2. SCALE MODELS

## AIRPLANE ALPHABET

| LETTER | NAME | CHAPTER |
|---|---|---|
| R | Elevator Leading Spar | Any Flying Scale Model Plan |
| S | Elevator Tip | 7 |
| T | Elevator Rib | Any Flying Scale Model Plan |
| U | Tail Skid | 6 |
| V | Rudder | Any Flying Scale Model Plan |
| W | Rudder Outline Stringer | Any Flying Scale Model Plan |
| X | Engine Cowling | 11 |
| Y | Propeller | 9 |
| Z | Landing Wires | 49 |
| AA | License Numbers | 3 |
| BB | Leading Edge | 7 |
| CC | Aileron | 49 |
| DD | Flying or Lift Wires | 49 |
| EE | Wheel Pants | 10 |
| FF | Wheel | 10 |
| GG | Landing Gear Strut | 10 |
| HH | Landing Gear Brace Wire | 10 |

# CHAPTER 2

## TOOLS

ONE of the reasons behind the world-wide popularity of model airplane building is that it is a hobby requiring few and inexpensive tools. Many model airplane builders use only a pocket knife, a razor blade and sandpaper, but the ten tools shown here form an assortment complete enough for all model work.

The two pairs of pliers shown in Fig. 3, Nos. 1 and 2 are recommended for this work. The round-nosed pliers shown in No. 1 are splendid for bending all wire fittings, especially those requiring round hooks, such as can, rear and "S" hooks, and propeller shafts. (See Chapter 6.) By bending the wire around the round ends of the pliers, perfect circles can be obtained.

The pliers shown in No. 2 are flat-nosed and have side cutters. These are good for making square bends over the square edge of the ends. They also serve for gripping and straightening wire. The side cutters are used to cut the wire. Both these pliers can be purchased at most five-and-ten-cent stores or at any hardware or model airplane supply house.

The coping saw shown in No. 3, helps in cutting out propeller blanks, solid-scale wings and fuselages, and sawing thick pieces of balsa. The frame and saws to fit it can be purchased with the pliers.

Razor blades make good tools for cutting and trimming balsa, slitting bamboo, and trimming tissue coverings. In Chapter 3, Figs. 4 and 5 are balsa cutters which use razor blades for cutting. They make quick and clean cutting jobs on all balsa pieces.

A small hand drill, known as a "pin vise," is of great use for boring propeller hubs, wheels, and other holes required in solid and built-up models. Tiny drills of $\frac{1}{64}''$, $\frac{1}{32}''$, $\frac{1}{16}''$, and $\frac{1}{8}''$ diameter can be purchased to fit the chuck of this type of drill. The drill is held in the hand and rotated through the wood. Model airplane supply houses and hardware stores handle these. Such a drill is shown in Fig. 3, No. 5.

The knife shown in No. 6 is a propeller carving knife, which should be used for all propeller carving. While this knife can be used for all cutting work, it is best to keep it for propellers only. Use a regular pocket knife for other jobs. Model supply houses handle these knives and their cost is trivial.

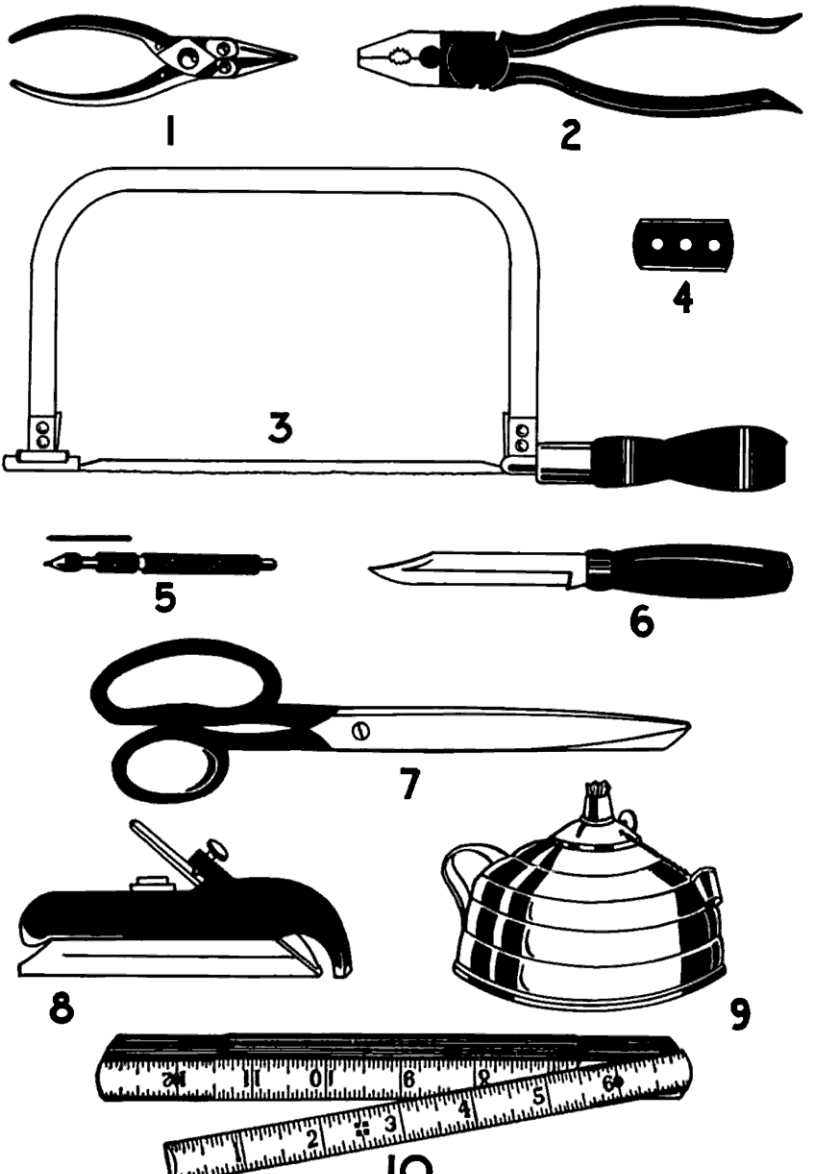


**TOOLS**

FIGURE 3

In No. 7 will be seen an ordinary pair of long-bladed scissors, which will come in handy for cutting tissue paper for all coverings, as well as ordinary trimming jobs. Such scissors should also be used to cut strands of rubber used for motors.

Many model builders use ordinary block planes for all heavy cutting and shaping jobs, but the author recommends the Stanley bull nose rabbet plane No. 75. It will prove most useful for shaping wings and fuselages of solid scale models. Such a plane can be seen in Fig. 3, No. 8, and can be purchased at any hardware store.

Bamboo is best bent over a flame, and for this purpose a small alcohol lamp, shown in No. 9, should be kept on hand. With such a lamp, the model builder is not dependent on gas fixtures, which cannot be moved from place to place, as can this simple lamp.

The tenth and last tool of our list is the most necessary and useful of them all, as nothing can be built from a plan without its aid. This is the rule. The Stanley zig zag, four-foot rule No. 404 can be purchased at all hardware stores and will answer every demand of the model builder. Simple home-made tool accessories will be given in the various chapters to follow, and the builder will soon find himself designing useful new ones as occasions arise. Keep your tools sharp, clean, and in good order, so that when they are needed they will be in condition to give you the required service.

## CHAPTER 3

## MATERIALS

BALSA WOOD. Today balsa wood is used exclusively on all flying models, and, because of the ease with which it can be worked, many builders use it on exhibition models.

Balsa wood comes from a tree found in the tropical jungles, which resembles the North American cottonwood. It has a smooth bark and grows to considerable height. The name balsa is the Spanish word for raft, applied to this particular wood because its logs were used for rafts on which heavier woods were floated down the rivers from the interior to the seacoast.

Balsa is the lightest wood that grows, being about half the weight of good cork and averaging about six pounds per cubic foot. It is comparatively strong, extremely light, and so easily worked that it can be cut with the thumb nail. All model airplane supply houses carry balsa wood in a number of sizes, and usually in three weights, known as soft, medium, and hard.

Balsa sticks of varying widths and thickness can be purchased, or "sheet balsa" in the form of thin boards can be obtained and cut into sticks. The builder should use the latter type of balsa when cutting his own strips. As all companies charge for cutting balsa wood into various sizes, the builder will find it cheaper to purchase large boards and do the cutting himself. With this in mind, the author has developed the small balsa cutter shown in Fig. 4. This consists of a 1/4" x 2 1/2" x 9" block of wood to which is nailed another piece of the same thickness as you wish to cut your wood. The second piece should be as long as the first but only half as wide. (See Fig. 4, No. 1.) For example, if you wish to cut 1/16" square strips, this second piece should be 1/16" thick and the stock used in the cutter should be the same.

A safety razor blade is now nailed in position, as shown in 2. One corner of the blade should extend about 1/8" beyond the edge of the second piece of wood. On this assembly a third piece is now nailed. It should be the same length and width as the second piece but about 3/8" thick. A top view of this assembly is shown in 3, while the end view appears in 4. Note the edge of the blade protruding from the second and third pieces of wood.

The edges of the second and third pieces serve as a guide for the stock

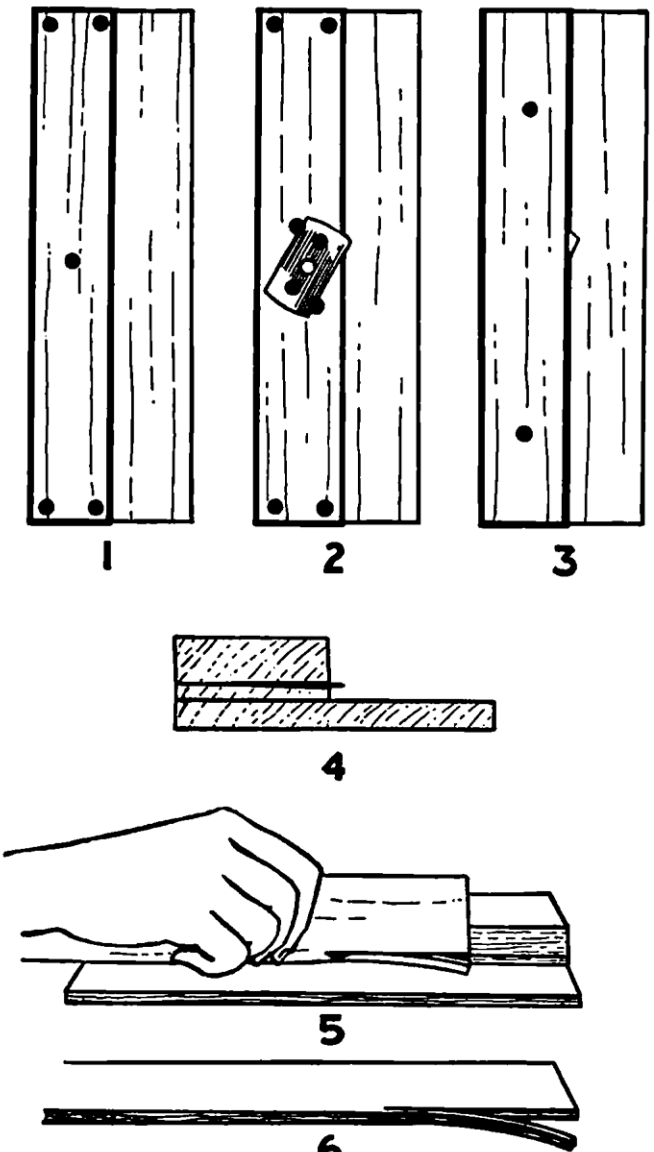


BALSA CUTTER

FIGURE 4

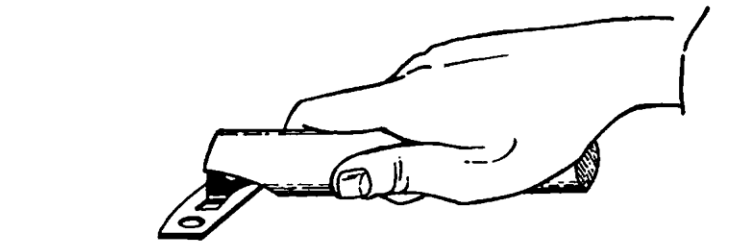

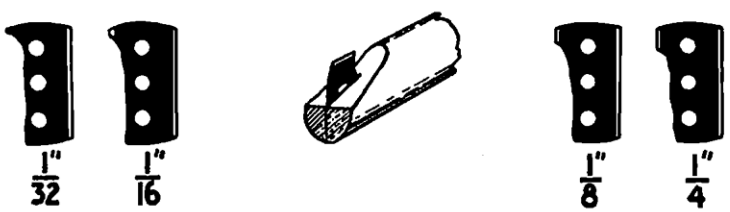


HANDY CUTTERS

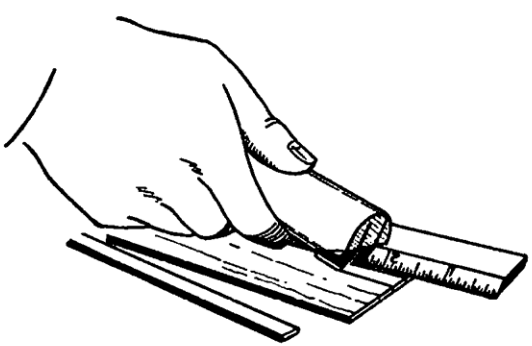


STRIP CUTTERS

# BALSA CUTTERS

FIGURE 5

being cut, which is moved along them and at the same time pressed against the first piece of wood, which serves as a base for the cutter, as shown in 5. The resulting strip of balsa is shown in 6. It will be found that the best results can be obtained when the cutter is held in a vise.

Another method of cutting balsa strips is shown in Fig. 5 under "Strip Cutters." The handle consists of a round length of wood, about 1″ in diameter. A dowel stick would serve splendidly. It should be about 6″ long. Its end is beveled, and two safety razor blades are cemented into slots cut in the stick for that purpose, as shown. The edge of the blade should extend

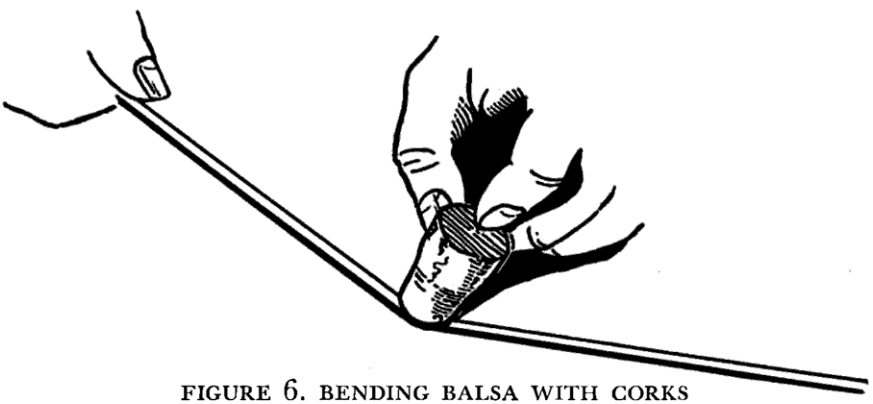

FIGURE 6. BENDING BALSA WITH CORKS

out of the beveled portion of the stick about 1/8″ to 1/4″. The distance between these two blades is determined by the width of strips you wish to cut. If this distance is 1/4″, the strips cut will be 1/4″ wide, etc. Four of the most popular sizes are shown. Note how the cutter is held while being used. A rule is used to guide the cutter. In this manner, strips of any desired width can be cut with ease. Always cut your wood with the grain.

When cutting circles, holes, or balsa wood to proper length, the blade of a safety razor will be found best. Another type of balsa cutter, designed expressly for such work, is shown in Fig. 5 under "Handy Cutters." For such a cutter, the blade has one edge cut or broken until only the desired length of the blade remains, as shown. It is then assembled in the same manner as the double-bladed cutter. Bevel the end of your stick, cut a slot, and cement the blade in place, allowing the edge of the blade to protrude about 1/8″ from the stick, as shown. A number of these cutters in different sizes should be made and kept handy for various cutting operations.

Because of its texture, balsa wood lends itself to bending quite easily. To do this, the balsa wood is usually soaked in hot water from five to ten

minutes, after which it can be safely bent. Another novel method, one which eliminates the soaking of the wood, is to heat corks by boiling them in water and then to apply them to the point on the wood where the bend is to be made. This is shown in Fig. 6. Keep applying the corks and keep bending the wood until the desired form is obtained.

Many builders find difficulty in holding the balsa wood in position until its fibers "set" through natural drying. To improve the usual method of pinning the wood in position to a base while drying, the author has designed two presses to do this work. In Fig. 7 will be seen a stick balsa press,

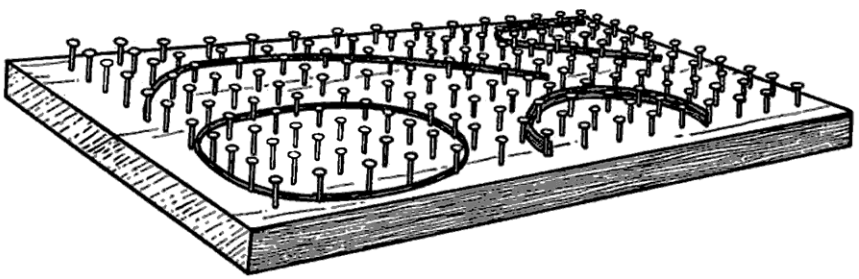

**STICK BALSA PRESS**

FIGURE 7. BENDING BALSA STRIPS

especially useful for the holding of all small pieces, such as single ribs, wing tips, light-weight formers, etc. It consists of a flat board into which small box nails have been driven in rows. The board should be of any desired size and about ½″ thick. The nails should be driven into the board until they extend about ¼″ above its surface. Large-head nails are used to prevent the balsa sticks from slipping up and off them, when forced into position. The wood is soaked, and then placed on the press in the desired position until dry.

For wide balsa boards, the sheet balsa press, shown in Fig. 8, will be found best. When cutting a number of ribs, it is often easiest to bend a piece of sheet balsa to the proper wing rib camber and then cut the ribs from this. In this manner, the builder is assured that all the ribs will have the same identical curve. Sheet balsa formers, cowling covers, etc., can be easily handled in this press.

It consists of a board of any desired size and about 1″ thick. In its top a number of holes are bored in rows, as shown in Fig. 8, No. 1. These should be 1/16″ or ⅛″ in diameter and about ¾″ deep. Into these, 1″ or 2″ long

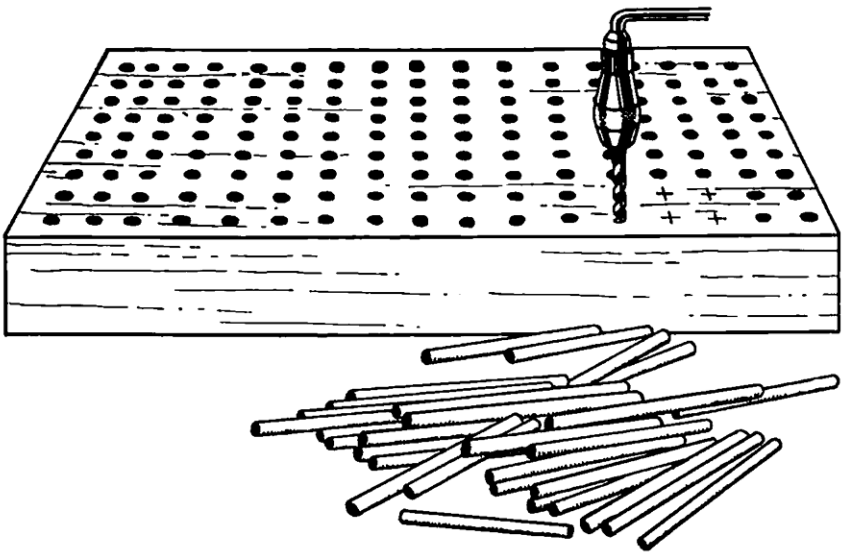

1

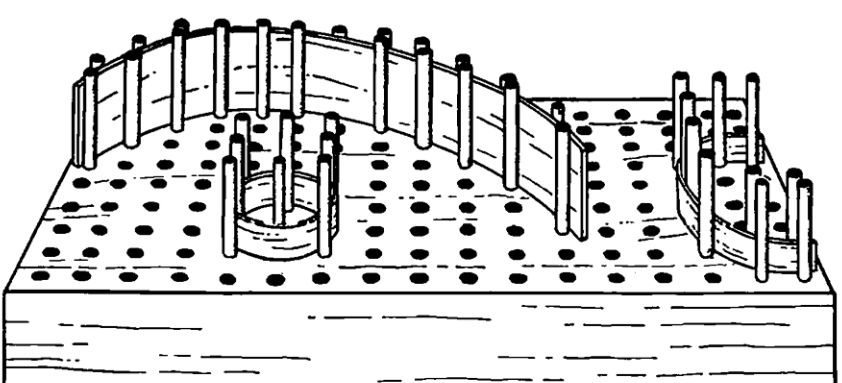

2

# SHEET BALSA PRESS

FIGURE 8

dowel sticks are fitted, which must, of course, be the same diameter as the bored holes.

Fig. 8, No. 2, shows how the press is used. The wood is soaked and bent as desired, and then placed on the press, where the dowel sticks are inserted into as many adjoining holes as necessary to hold it in position until dry.

BAMBOO. Bamboo is a wood consisting of a round, hollow cane, divided into sections by knotty knobs, or joints, called "nodes." One of its surfaces has a hard, glazed coat, which is the portion best suited to model work. In early days, model builders used a great amount of reed, but with the necessity of cutting down weight on model construction bamboo soon replaced it.

This was because of several qualities found in bamboo and lacking in reed. The former could be split to very small diameters, such as $\frac{1}{64}''$, $\frac{1}{32}''$, etc. It is tough, straight-grained and flexible in fiber content, which allows it to be easily worked, makes it practically unbreakable, and permits bending to any required form.

Split bamboo can be purchased in any model supply house, or the builder can secure a pole and do his own cutting. Cut the piece into sections at its nodes, and then split its shiny side into strips. These can be smoothed with your block plane. For model work, only the parts having the original glazed surface are suitable.

Bends can be easily made in bamboo and will hold indefinitely. Heat is used for bending it. In Fig. 9 five methods are illustrated. The oldest of these is the open flame, shown in 1 and 2. Here the bend is made over the flame of a candle or alcohol lamp. Builders use this method today, but the danger of scorching or burning the wood is great, and experience is required to make proper bends in this manner.

A safer method is shown by 3. Here the bamboo is bent over the tip of an electric iron. This eliminates the danger of burning the wood, permitting sharp bends to be made. An electric light bulb can also be used, as in 4. If the bend is circular in form, this method is splendid, although sharp bends cannot be made.

For sharp bends the end of a regular electric curling iron gives ideal results, as shown in 5. After the heat has made the fibers of the wood thoroughly pliable, it should be removed from the heating device and allowed to cool while held in position. It will then retain its curve. Bamboo is used for such parts as wing tips, landing gears, ribs, and skids. Modern construction of very light, small, endurance models, on which every part must be as light as possible, has replaced bamboo parts with balsa to a great

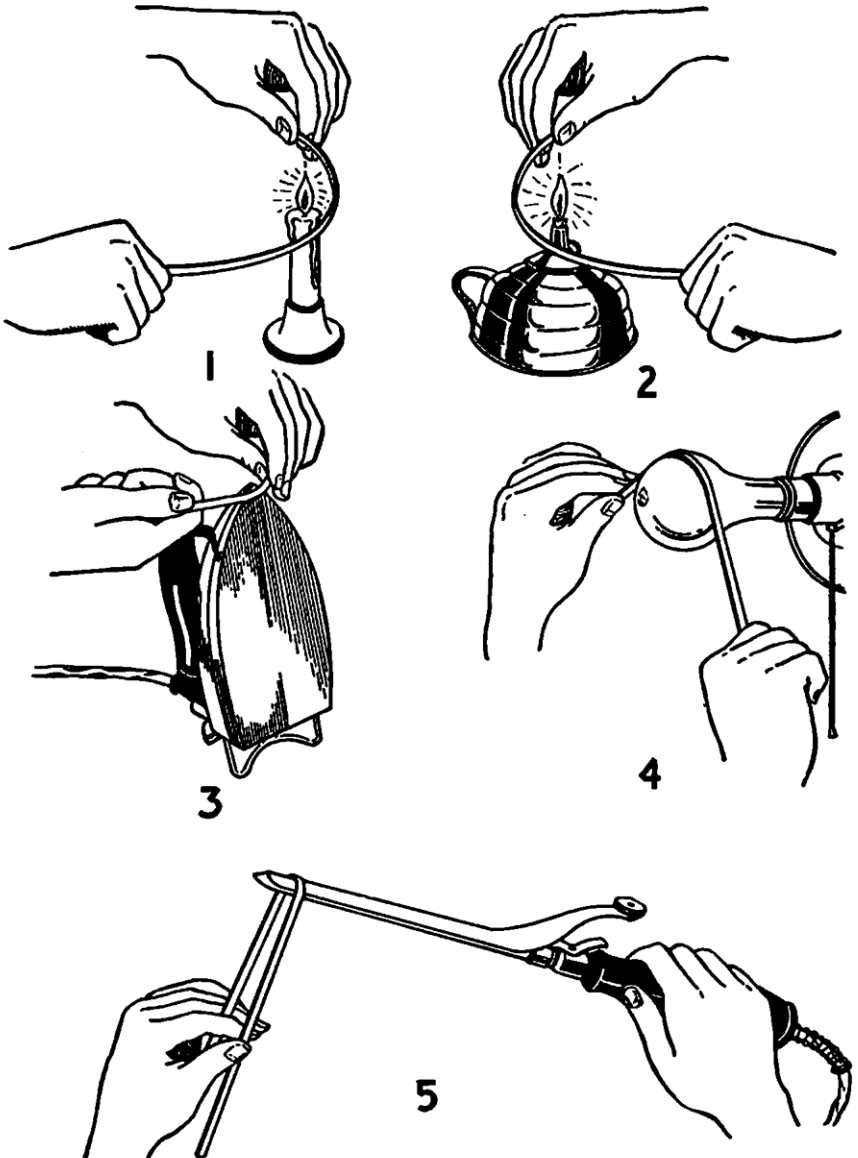


**BENDING BAMBOO**

FIGURE 9

extent, although the beginner will find the former much easier to handle and bend than the balsa.

PINE. While balsa wood is now used for flying models of all types, many builders prefer pine for certain parts on exhibition planes such as solid scale and built-up, non-flying models. This is done chiefly to strengthen such models against the wear and tear of handling and moving them from exhibition to exhibition. Pine will stand such rough usage better than balsa wood, and as weight is not a factor for consideration in non-flying models, the former wood is often preferred. Many builders prefer to use pine for cutting solid scale fuselages, but chiefly because pine is more easily obtained and costs less.

Aside from these factors, balsa wood will be found superior, as it can be worked with an ease impossible with pine. Pine sticks and boards of various sizes can be had from any model supply store.

RUBBER. After long experimentation, it has been found that the most efficient rubber for motive power on model airplanes is pure Para rubber. It can be obtained from all supply houses in various sizes. (See Chapter 12.)

FILLER. Wood fillers can be used to fill cracks, make small parts, streamline cowlings, wings, and fuselages. There are several of these on the market which are obtainable at model supply houses, hardware stores, or five-and-ten-cent stores. Possibly the best known of these is Plastic Wood. The Northrop Gamma shown in Chapter 48 has its wing tapered into the fuselage with the aid of such a filler, and the builder will find it of aid in forming small parts, such as gun mounts, exhaust pipes, steps, and many other minute parts.

Plastic Wood can be purchased in cans and has the consistency of putty. When it becomes dry it is practically wood, and can be sawed, planed, cut, or sandpapered. For its proper use, follow the instructions on the can.

COVERING MATERIALS. *JAPANESE TISSUES.* These are classed as rice and bamboo papers. Of the former, two grades are the most popular in model building. These are superfine Japanese tissue and Hakone tissue. The former is the best of these, but it is also the most expensive. Hakone is a very popular paper, being extremely light and tough.

Both are splendid for all models weighing less than four ounces, but for models of greater weight bamboo tissues are preferable. Throughout this book all reference to Japanese tissue indicates rice paper of either grade.

Bamboo tissues are extremely tough and at the same time light enough for all flying models over four ounces. All model supply houses handle a full line of these papers, and the novice should experiment with various strengths, weights, and grades of these tissues in determining the kind best

suited for his models. For instructions on using these tissues see Chapter 7, "Wing Covering."

*SILK.* Many builders prefer to use Japanese silk for covering non-flying scale models. All supply houses handle this silk. The method of using it is the same as that for tissue coverings, except that the silk should be pulled taut to prevent it from sagging. If the model is not painted, the silk must be given a preservative to make it air-tight. After stretching it with the usual water-spray, a thin coat of clear banana oil should be applied. This fills up the pores and makes it air-tight. All other instructions covering the use of Japanese tissue apply to silk.

Silk for covering flying models is not recommended because of its excess weight and the possibilities of warping fragile construction. On solid scale models silk is sometimes used to imitate built-up construction. (See Chapter 7, "Solid Wing Construction.")

*GOLD BEATER'S SKIN.* This is sometimes used for model airplanes, but does not enjoy the popularity of either tissue or silk. It is an animal product stripped from the lining of a cow's stomach. It is by far the strongest covering obtainable, and is tough, thin, and quite light. It can be purchased in a variety of colors, and has more resistance against puncture than silk or tissue. It is not suitable for flying models, but is quite adaptable for others.

WIRE. Practically all metal fittings necessary on flying models are bent from wire. Because of its strong tensile properties, a high grade of piano wire is used for these parts. It can be purchased in various diameters from all model supply companies. Because of its great strength, stiffness, and toughness, this wire can be used in extremely small diameters with perfect safety, while other types of wire would require larger diameters to produce the same strength and consequently would weigh much more. (See Chapter 6.)

WASHERS. On all parts requiring free motion, small $\frac{1}{16}''$ or $\frac{1}{8}''$ outside diameter washers of either brass or aluminum are used. These can be purchased at model supply houses, and are necessary for propeller shafts, landing gear wheels, etc. In some cases, beads and spangles have been substituted for these washers, and they are quite efficient on all small, light flying models, but for the larger types of flying planes, the regulation washers should be used.

CEMENT. The demand for a quick-drying, waterproof, light-weight adhesive produced a number of first-class cements. The most popular of these is known as "Ambroid." This is still used by many model builders, but colorless cements are fast replacing it. The adhesive power of these cements

is so great that minute parts can be joined together so tightly that the surrounding wood will break before the cemented joint will give.

DOPE. Another liquid well-known to the model airplane world is a rather thick substance known as "dope." Its main use is to pull the covering of a model taut, giving it a smooth, drum-like surface. It preserves and strengthens the covering and protects it from dust, dampness, and wear.

It is also widely used as an adhesive to hold the covering to the framework. Many builders strengthen propellers on larger models by brushing a coat of dope over their surface.

The best known of these so-called "dopes" is banana oil, which is often thickened with celluloid. While some builders purchase banana oil and mix it with celluloid, this is not recommended inasmuch as it requires considerable knowledge to do. It is better to purchase regular dope prepared especially for model airplane work. This comes already mixed to proper consistency. Clear dope can be purchased for models that do not require color, or, if desired, dope can be had in a variety of colors.

For all large models, the dope can be safely used as it comes, but for all those of fragile construction, it should be thinned with acetone. Some builders use clear banana oil for fastening their coverings over models, and then thin it with acetone for stretching the tissue or silk. Silk can best be tightened and made air-tight by a thin coat of clear banana oil. This is given the silk after the usual water-spraying. (See Chapter 7, "Wing Covering.")

Dope often becomes very thick and sometimes turns completely hard. When this occurs it can be restored to its original consistency by adding acetone, but when it is perfectly hard it will be found best to throw it away and purchase a new supply inasmuch as the acetone may cost as much as a new can of dope.

EMBLEMS AND LICENSE NUMBERS. Various emblems and insignia, as well as license numbers, are required for true scale models. The former can often be purchased from model supply stores, although these are usually limited to war insignia. For this reason 120 of the most commonly used insignia have been reproduced in Chapter 14 with full instructions for their proper use.

License numbers are another important detail of the true scale model. They may be painted directly on the wing, or can be drawn, cut out, and glued to the surface. Another method is to cut the numbers from large calendars. Small calendars provide splendid numbers for tail units and fuselages, but it must be remembered that these must be the correct size. The large wing license numbers should have a height equal to two-thirds the

width of the wing. They are located on the under side of the left wing and on the upper side of the right wing. The under numerals should read from the front of the plane, while the upper ones should read from the rear.

PAINT. See Chapter 13.

MODEL ACCESSORIES. In Chapter 15 a number of model airplane accessories are shown together with full instructions for making each, but the average model supply company can furnish these if you do not wish to make them. Bombs, machine guns, steps, instrument boards, seats, cowlings, engines, parachutes, and many other accessories can be purchased to improve the appearance of scale models. In Chapter 11 the building of motors and cowlings is fully covered, and in Chapter 10 such things as wheels, wheel pants, and various types of landing gears are given. All model builders should keep a library of dealers' catalogues, so that they can become familiar with all the various parts and accessories these companies have to offer.