AERO MODELLER

Full size plan
25" wingspan
rubber model

MAY 1963 TWO SHILLINGS U.S.A. & CANADA 40 Cents

BUILD THIS 1/12th SCALE HANRIOT W.W.1 FIGHTER

Gadgets • Helicopters • Contest designs

spring into action

with QUICKSTART

For real flying get-away this season count on superb precision made QUICKSTART engines and accessories. There's a complete range of exclusive-feature products to get you airborne ahead of the field—and keep you there!

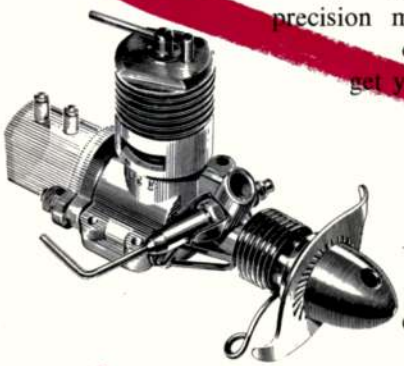

ENGINES
—all easy to start with unique cam Quickstart

Diesels Six of the world's finest model engines from ·55 c.c. to 2·46 c.c.—designed by experts for experts.

Glowmotors Outstanding glowplug engines with superb performance, unbeatable in their class, unmatched at their price.

FUEL High quality oils specially blended for instant starting, maximum power, long engine life. Both Glowmotor and Diesel Grades available.

ACCESSORIES
Everything from the tiniest glowplug to control line handles, including propellers, tanks, test stands, connectors, and now—

Silencers
inexpensive, lightweight, easy-to-fit units for reducing engine noise without power loss.

for all that's best in power flying

DAVIES-CHARLTON LIMITED HILLS MEADOW DOUGLAS ISLE OF MAN

Editorial Director
D. J. Laidlaw-Dickson

EDITOR
R. G. MOULTON

AERO MODELLER

MAP HOBBY MAGAZINE

other modelling angles . . .

Radio Control Models & Electronics has a boom issue in its May edition, specially lined up for all single channel fans and introducing a large FREE *full size plan* model for one of the hottest, toughest little 28-in. models it has ever been our pleasure to witness on the local field. **Jumping Gemini** was specially created to our specification by David Tafler, developed through several prototypes with increasing power, up to the latest Cox Tee Dee .049, using a wide variety of escapements and Otarion Rx. We know all the button pushers will love this one, it has really captured us and will be well worth the cover price of the mag. This is not all, the issue covers loads of installation details, small model, small field, small Rx. experience. A new "How to" series introducing novices to the arts of RC, begins with soldering, a simple pulse control system, hints on building a single channel kit, some hot news on new commercial developments and beside all this, still more news too for the multi-channel man. All in all, a bumper issue certainly not to be missed.

In May *Model Maker*, see plans for a smart 22-in. Italian motor yacht ably supported by a feature on Col. Bowden's experience on airflow around sails. A plan for a new Thames tug and details of a high speed marine steam engine, will be attractive to the boat enthusiasts, while for car fans, scale drawings of a Le Mans Bentley and Maserati 151 G.T. Add to this data on a model B.R.M. and a test on the Taplin Marine Twin and you will see that this too is an issue full of interest.

May 1963

VOLUME XXVIII No. 328

contents

cover

Colour photograph of 1/12th scale Hanriot HD.1 World War I Belgian Fighter ably illustrates the attractive and simple lines of B. J. Roger's prototype. Full details of this model are given on pages 228/229 of this issue. Powered by an Elfin 0.5 c.c. diesel, the Hanriot proved to be a most satisfactory performer in our flight tests and we can thoroughly recommend it to all who would like to make a start in flying scale modelling. Colour details are included on the full-size plans and this cover will be a most useful guide for modellers.

next month . . .

Single channel radio control enthusiasts who prefer to fly for fun rather than to enter competitions, will thoroughly enjoy one of the most well proved models we have ever taken into AEROMODELLER Plans Service. **Lumpers** incorporates all the known features for reliability, strength and good performance. Developed in the ideal conditions out in Uganda, where model supplies are far from being readily accessible, it is a really genuine result of circumstances where only the most robust and easy to construct design is good enough. 48-in. span, for 1.5 c.c. engines, Lumpers will be presented in a most comprehensive plan. *Full-size plan* of the month will be for one of the most successful **combat** designs of the 1962 season, our first remote elevator job and one which has been specially selected for June issue to coincide with the impending Nationals, where combat entries and enthusiasm reach a peak. Inside story of the *Super Tigre* Factory, more **Hints 'n Tips,** latest motors reviewed and lots more up our sleeves to surprise you, all in June issue out May 17th.

Editorial and Advertisement offices

38 Clarendon Road, Watford, Herts

Telephone: **Watford 32351** *(Mon.-Fri.)*

CORRESPONDENCE anticipating a reply to addresses within the United Kingdom, must be accompanied by a stamped and self-addressed envelope. News reports should be submitted to arrive not later than the 15th each month for publication in the next immediate issue. Photographs should be accompanied by negatives where possible and can only be accepted for use on an exclusive basis for British copyright.

Second class postage rates paid at New York N.Y. Registered at the G.P.O. for transmission by Canadian Magazine Post. American enquiries regarding subscriptions, news stand sales and advertising should be sent to: AEROMODELLER, Eastern News Distributors Inc., 255 Seventh Avenue, New York 1, N.Y., U.S.A.

Direct subscription rate (Inland) 28/6 (Overseas) 27/6 per annum including enlarged December edition and index. U.S.A. and Canada direct rate $4. AEROMODELLER incorporates the MODEL AEROPLANE CONSTRUCTOR and is published monthly on the third Friday of each month prior to date of publication by:—

MODEL AERONAUTICAL PRESS LTD

Three of The Best !

VISCOUNT

For Radio and Free Flight Completely Pre-fabricated

Optional wing span—54 in. for Radio 48 in. for F.F. for motors up to 35 c.c. For single and lightweight multi channel 5 c.c. for Fast penetration and Pylon Racers Extensively Prefabricated.

Price **113/6** inc. P.T.

ROBOT

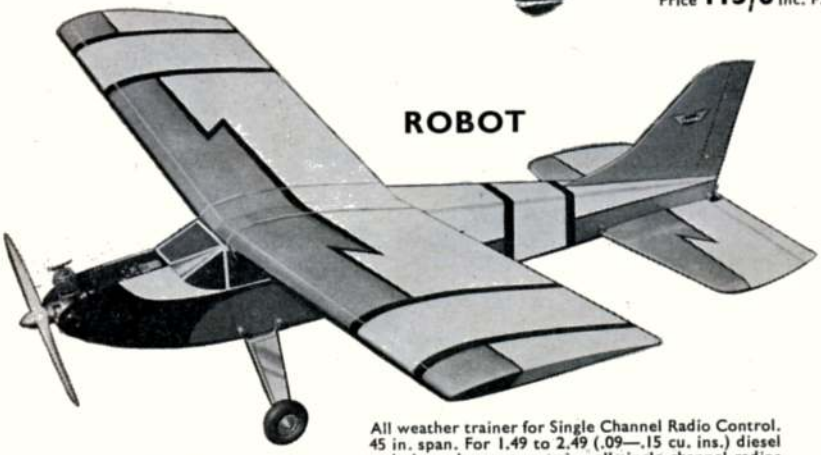

Designed Expressly For ***Radio Control***

All weather trainer for Single Channel Radio Control. 45 in. span. For 1.49 to 2.49 (.09—.15 cu. ins.) diesel and glow plug motors using all single channel radios for rudder, elevator or engine speed control.

Price **79/6** inc. P.T.

The Best Trainer for All Weathers

SKY SKOOTER

Rugged and Stable at all times

A perfectly proportioned modernistic performer! Specially designed to suit transistorised Single Channel Units. For rudder only. Span 48 in. for 1.0 to 1.5 c.c.

Price **32/6** inc. P.T.

VERON

– of course

ED OFFICIAL DISTRIBUTORS DC

MODEL AIRCRAFT (B'MOUTH) LTD. NORWOOD PLACE • BOURNEMOUTH

DISTRIBUTORS IN U.S.A. **WESTEE HOBBY IMPORTS, 5808 West Chicago Avenue, Chicago, 51, Ill. U.S.A.**

DISTRIBUTORS IN CANADA. **ACADEMY PRODUCTS LTD., 955 Roselawn Ave., Toronto 19, Ontario.**

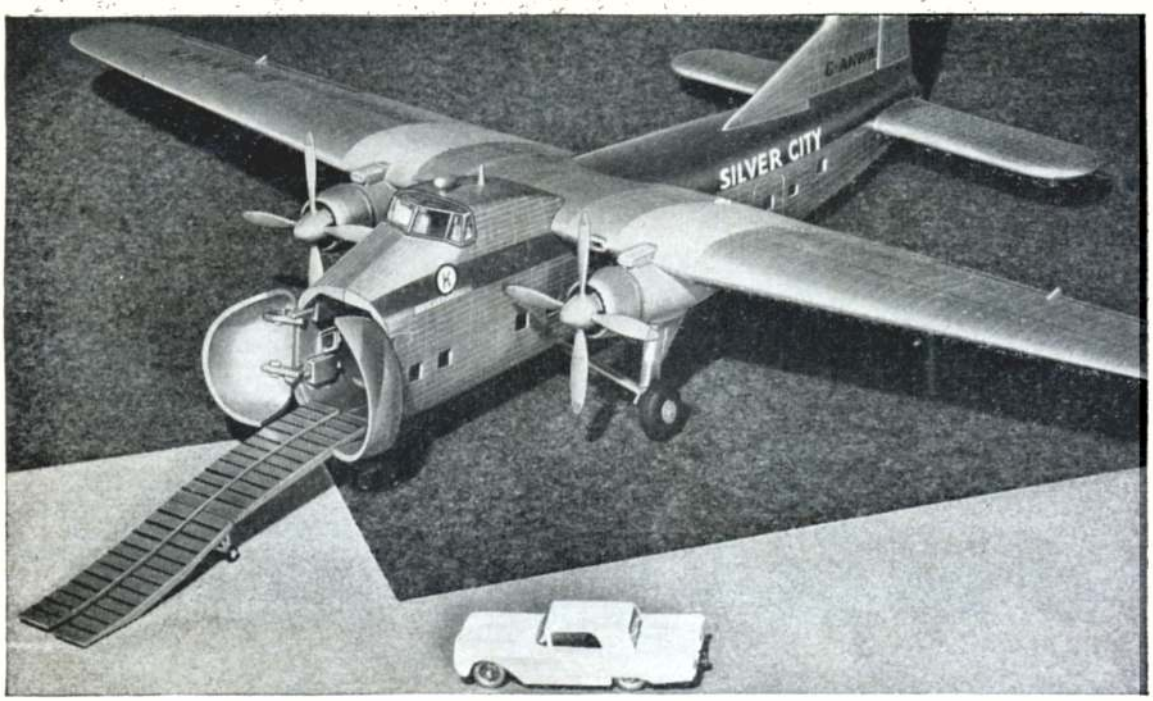

. . . even the loading doors open!

This Airfix 1/72nd scale Bristol Superfreighter is a perfect model of detail. Complete with loading ramp. 18" wing span. 107-part kit 7/6.

It's typical of the realism you get with Airfix models. They're just like the real thing! More than that, though, Airfix give you constant scale, so that the models of every series are proportionately right; and a great ever-increasing range—there are 11 series now, with over 150 kits. At prices from 2/- to 12/6, Airfix are great on value too.

For endless modelling fun—make it Airfix.

JUST LIKE THE REAL THING! AIRFIX **CONSTANT SCALE CONSTRUCTION KITS**

From model and hobby shops, toy shops, and F. W. Woolworth.

STOP PRESS !

LATEST AIRFIX PRODUCTION

F.IA LIGHTNING

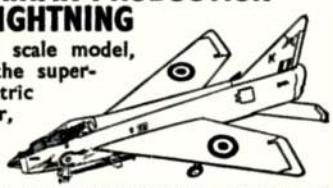

A brilliant 1/72nd scale model, 9½ ins. long, of the supersonic English Electric bomber-interceptor, 35-part kit, plus transfers and display stand, 3/-.

ALSO NEW 1/72nd scale *HAWKER P.1127* vertical take-off aircraft, 2/-.
HO/OO scale *JOSEF STALIN 3 TANK*, 2/-.

A.362

GET YOUR CATALOGUE

28 pages of models, facts and kit details from your dealer - only 9d

We have INVESTED over £1,000 in

THE LATEST R/C EQUIPMENT, INCLUDING CONTEST WINNING

ORBIT

R.E.P., R.C.S., METZ, KRAFT, BONNER, BABCOCK, OTARION, F.R., GRAUPNER-GRUNDIG, ELMIC, RIPMAX, etc. In order that our customers may enjoy their rightful privilege of examining their choice of equipment before purchase.

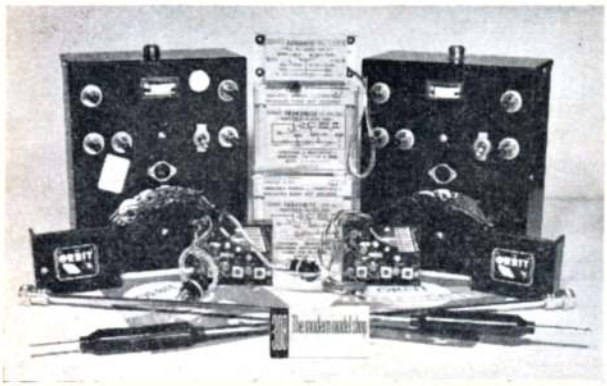

This photograph is of only a fraction of our current stock of imported R/C gear and includes two of the latest all-transistor 10 Ch. simultaneous ORBIT transmitters with matching receivers, and examples of the BONNER Transmite and Duramite servos.

HIRE PURCHASE TERMS CAN BE ARRANGED

- ORBIT 10 Ch. complete with power pack £104
- BONNER Transmite trim £10
- BONNER Transmite S/N £11
- BONNER Duramite £5 4s. 0d.

POSTAL ENQUIRIES DEALT WITH BY RETURN

HENRY J. NICHOLLS & SON LTD.,

THE MODERN MODEL SHOP

308 Holloway Road, London, N.7 Tel. NORth 4272

★★ NEW METZ R/C FOR 1963 ★★

Metz Baby Receiver. Lightweight. No Tuning	£10/14/0
Metz Baby Transmitter Compact. Powerful	£13/5/9
Baby Gift Set. Complete R/C Unit	£26/8/4
3 Channel Tx. Works off four U2 Batteries	£18/18/8
3 Channel Relayless Rx with Switcher incorporated	£22/11/6
Single Channel Plug-in Mecatronic Servo	£3/19/6
Entirely new Multi Servo. Lightweight. Powerful	£4/9/6
10 Channel Tri-Simul All Transistor Transmitter	£37/14/3
6 Channel Superhet Relayless Receiver. 6 volt	£35/6/4
10 Channel Superhet Relayless Receiver. 6 volt	£51/12/11
Complete 3 Channel Unit with 2 Servos	£49/10/–
Complete 10 Channel Unit with 5 Servos	£111/–/–

THERE ARE 3 *NEW* FREQUENCIES AVAILABLE ON 6 & 10 CHANNEL Rx's

★ NEW C & S PRICES FOR 1963 ★

C & S "Falcon" Tone Tx Crystal Controlled	£10/10/–
C & S "Finch" Relayless Rx with Dual Output	£9/18/–
C & S "Hummingbird" ¾ oz. Relayless Receiver	£8/5/–
C & S "511" New ½ oz. Sub Miniature Receiver	£7/18/–
C & S "Pulsitran" Compact Electronic Pulser	£8/15/–
C & S "Septalette" Magnetic Actuator for Pulse	£2/15/–

★ SELECTED KITS ★

Topflite "Taurus" Multi	270/–
Topflite "Tauri" Trainer	185/–
De Bolt "Viscount" Multi	225/–
Sterling "Spitfire" Scale	256/–
Sterling "Mustang" Scale	256/9
Graupner "Weihe" 72" Glider	72/6
Veco "Hurricane" Stunt	119/6
Ambroid "Stuka" Stunt	99/–
Ambroid "Ares" Stunt	89/–
Frog Jackdaw 60" R/C	117/6
K.K. "Super 60" 60" R/C	107/–
Veron "Robot" 45" R/C	79/6
Mercury "Crusader" Stunt	69/8
Yeoman "Scorcher" Combat	23/6
Graupner "Filou" 50" Glider	45/–
Veco "Thunderbird" Stunt	89/–
Topflite "Nobler" Stunt	89/–
All K.K., Frog and Mercury Kits	

—HUNDREDS MORE IN STOCK—

★ R/C EQUIPMENT ★

Mini Reptone Complete	£17/2/4
Twin Triple Tx, Rx and two Elmic Escapements	£27/14/9
Quadratone Tx and Rx	£33/12/10
Octone Tx and Rx	£51/18/–
Dekatone Tx and Rx	£64/18/6
Orbit 10 all Transistor	£100/–/–
R.C.S. Guidance System	£18/18/–
Add Harness and Actuator	£2/18/–
Bonner Duramites	£5/4/–
Transmites Trim	£11/–/–
Transmites Neutralising	£11/15/–
Amplifiers SW, 92/6. Trim	77/6
Elmic Commander	£2/19/2
Elmic Conquest	£1/15/–
Graupner Unimatic	£2/19/6
Graupner Duomatic	£5/5/–
Graupner Bellamatic II	£5/12/6
Climax Musclemite. New	90/11
Climax Unimite	£3/1/7
Terrytone Rx Kit	£5/19/6
Kraft K3VK 3 v. Kit	£6/15/–
Otarion ½-oz. 3 v. Rx	£11/15/–
Controlair 10 Superhet	£93

★ SELECTED ENGINES ★

Cox Medallion 049 Glow	65/–
Cox Medallion 09 Glow	85/–
P.A.W. .149 c.c. Diesel	86/–
P.A.W. 19D 3.2 c.c. Diesel	104/6
Veco 19 3.2 c.c. Glow	109/–
O.S. Pet 1.6 c.c. Glow	47/6
O.S. 19 3.2 c.c. Glow	124/–
E.D. Cadet 1 c.c. Diesel	63/–
M.E. Snipe 1.5 c.c. Diesel	61/–
E.D. 2.46 c.c. Racer	82/7
A.M. 15 1.5 c.c. Diesel	63/–
Merco 35 6 c.c. Glow	119/6
McCoy 35 6 c.c. Glow	60/–
McCoy 19 3.2 c.c. Glow	55/–
Silver Arrow 3.5 c.c. D.	110/–
Fox 35x Stunt 6 c.c. Glow	99/6
ETA 15 2.5 c.c. Diesel	119/6
Merco 49 R/C 8 c.c. Glow	239/6

—MANY MORE IN STOCK—

★ POPULAR ACCESSORIES ★

Johnson R/C Glow Plugs	6/–
Johnson Standard Plugs	4/9
Johnson Automix Carbs.	59/6
D.C. Quickstart Silencers	5/4
Modellers Nylon in White, Red, Blue, Yellow, sq. yd.	6/–
Jap Silk, White only, sq. yd.	6/–
Graupner Wheels, per pair: 2", 5/–; 2½", 7/–; 2¾", 11/–; 3½",	17/9
Charon Glider Winch	18/11
Charon Altmaster	27/6
Charon Speedmaster	27/6
Engine Test Stand	12/3
Xacto 84 Hobby Chest	79/6
Araldite Twin Pack	6/–
XK 12" x 6" Nylon Props	7/6
Winking Light Set	10/8
XFY 34 Valves	18/6
Cox Gloheads, All Sizes	7/6
Xacto Block Plane	7/9
K.K. 4" Airwheels	32/–
K.K. Fuel Cut out	5/–

ALL DEAC PACKS IN STOCK
NEWS LETTER ON REQUEST

★★ LATEST ADDITIONS ★★

Gremlin "LANCER 49"' span high wing, advanced trainer and contest winning model for rudder only. A very complete prefabbed kit. Sprung nose wheel and dural main u/cart with fuel-proof rubber wheels. This model will withstand the knocks and is capable of winning in *your* hands. For 2.5-6 c.c. engines. I will again be flying an identical model in most contests this year. Price **99/6.** The new McCoy 35 with R/C conversion handles nicely and is offered with every confidence. The price is right at **99/6.** New in stock from Shuco—the "COMPLETA" 37 in. span R/C trainer, which is ready for engine and R/C installation. No building or covering to be done. Buy today—fly today, **126/–.** New Gremlin fuel-proof tyred wheels with nylon hubs. Tyres welded to hubs permanently. 2 in. pair **6/11,** 2½ in. pair **7/11.** Welded elevator horns for control line and R/C in three sizes: small C/L, **1/9;** large C/L, **2/–.** R/C type with bushes, **3/6.** Four-coil sprung nose-wheel unit with 2 in. wheel, **6/11.** Dual vent clunk tanks for R/C in four sizes: 2 oz., **6/–;** 4 oz., **7/–;** 6 oz., **8/–;** 8 oz. **11/–.** Black fuel-proof tubing, large ¼ in. bore, small 3/32 in. per yd., **2/–.** Twin wheel telescopic u/carts 2 in. wheels **14/6;** 2½ in. wheels, **17/6.**

SECOND-HAND ENGINES AND RADIO EQUIPMENT ACCEPTED IN PART EXCHANGE FOR ANY MODELLING GOODS

ALL OVERSEAS ORDERS ARE FORWARDED FREE OF TAX
INLAND ORDERS OVER 40/– FORWARDED POST FREE

ROLAND SCOTT LTD.

MODELS BY MAIL

147 DERBY STREET, BOLTON, LANCS.

Phone: Bolton 27097 any time

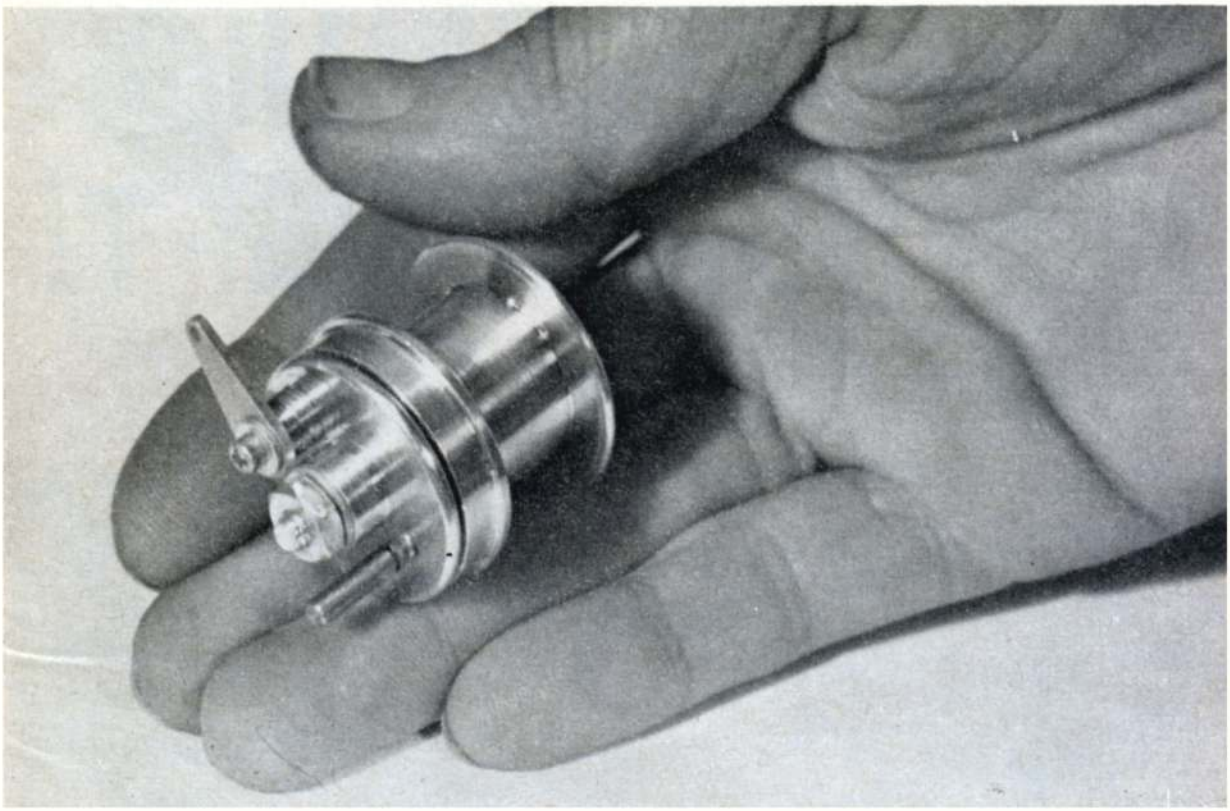

RIDE (AIR CUSHION) HIGH with the HOVERCRAFT!

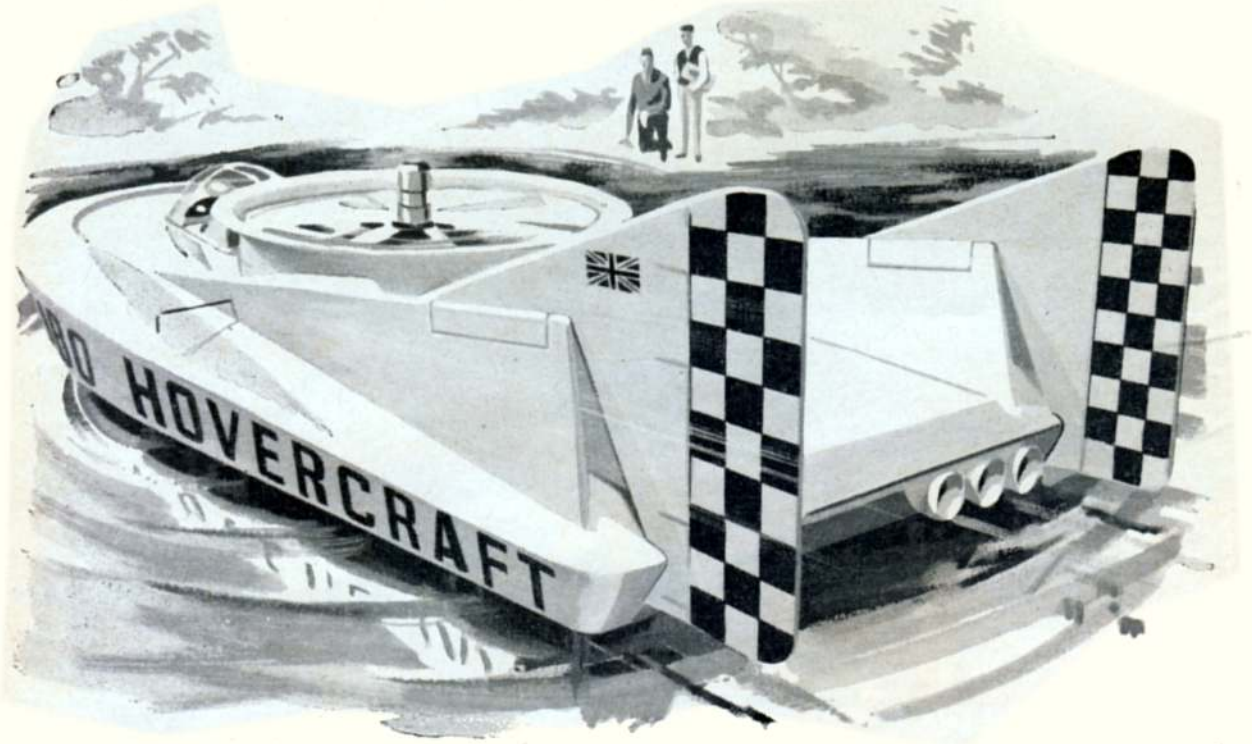

TODAY'S MOST ADVANCED WORKING MODEL AS DEMONSTRATED ON T.V., NEWSREELS AND PUBLICISED ON RADIO AND IN THE PRESS

Traverses flat land or reasonably calm water on a cushion of air like a real Hovercraft. Easy to assemble, all plastic kit with the most magnificent set of step-by-step instructions, including 15 large photo-illustrations. Also cement, accessories, and *FREE BP Fuel Dispenser*. Recommended suitable ·8 c.c. glow-plug engines: A.M. 049 "Cobra", and FROG 049. Overall size of model: Length 17 in., Width 11 in. Height to top of rudders 4 in.

Kit price	£2/2/0
Also made-up model (Complete with motor)	£7/5/0

MOBO HOVERCRAFT *See it now at your model shop!*

Free BP Fuel Dispenser!

Each box contains free BP Fuel Dispenser and fascinating detailed account of BP Fuel-research work on real Hovercraft development.

Designed and made by the JETEX Division of

D. SEBEL & CO. LTD.

West Street, Erith, Kent.
Telephone: Erith 33020.
Telegrams: SEBELCO, Erith.

Whirlwind pilot taking part in land/air exercise with men of the R.A.F. Regiment

For the man who counts, work that matters!

With 5 'O' levels you could fly as an officer in the R.A.F.

Three years ago this young man joined the Royal Air Force. Today he is the pilot of a helicopter trained for a host of duties including airlifting supplies, casualty evacuation, minelaying and missile- and gun-firing. In the last two years, Whirlwinds of his squadron have carried out operations in Germany, Libya, Kenya, Somalia and Greece as well as all over Britain.

Serving as an aircrew officer is one of the most satisfying careers you could choose—and the rewards come early. You could be an officer within six months of joining, at 21 you could earn £1000 a year as a Flying Officer; at 25 as a Flight Lieutenant drawing full allowances you could earn over £1850. You will have a pensionable career to 38 with good prospects of service to 55. Alternatively you may choose to leave after 8 or 12 years with a tax-free gratuity.

Is flying the career for you?

To become an aircrew officer you must be a leader with a strong sense of responsibility and have a sound education. You must have passed—or be still at school expecting to pass—G.C.E. at 'O' level (or equivalent) in mathematics, English language and three other acceptable subjects, before you can apply for a Direct Entry commission. You must be between 17 and 26. For full information write for the illustrated booklet "Flying and You", giving your date of birth and details of education to Group Captain J. A. Crockett, R.A.F., Air Ministry (AM933), Adastral House, London, W.C.1.

The Royal Air Force

BOOKLETS & CIRCUITS

AEROMODELLER TRANSISTOR Rx
By Tommy Ives
Popular carrier wave set for small models, follows fast pulsing has lightweight and low battery drain virtues.
RC/736 2/-

IVY-AEROMODELLER CARRIER WAVE RECEIVER
Ideal and inexpensive project for the beginner. Well-tried Ivy circuit brought up-to-date. Full stage-by-stage instructions in six-page leaflet.
RC/795 2/-

IVY-AEROMODELLER CARRIER WAVE TRANSMITTER
Simple single channel C.W. Tx. for use with Ivy Rx. Suitable for beginners. Hand-held with telescopic aerial. Eight-page leaflet.
RC/794 2/-

IVY-AEROMODELLER TONE TRANSMITTER
Development of the Ivy/AM CW. Tx. P/C technique makes it as simple as C.W. version. Suitable for "near" beginners. Six-page leaflet.
RC/801 2/-

HILL TRANSMITTER
A X/tal controlled Tx. by Eric Hill is recommendation in itself. Can be simple or incorporate Tone, Control Box for tuned reeds, etc., in fact it should last a modelling lifetime. 10-page leaflet.
RC/802 2/-

RADIO CONTROL WITH VIBRATING REEDS
By R. H. Mapplebeck
Covers complete instructions for building 3-valve Rx. and 3-valve handheld Tx. to suit, including making of reed bank. Not miniature equipment but ideal for boat use. 16 pages of detailed information. 3/6
MM/608

HILL 2-VALVE RECEIVER
By E. R. Hill
Eight-page booklet gives full constructional data for both standard and miniature versions of most successful carrier-wave sets for aircraft, current rise 0.4 m.A. to 4.0 m.A.
RC/664 2/-

GALLOPING GHOST and pulse proportional data
All published information on single channel proportional radio control summarised in special booklet. Includes topline U.S.A. and British expert advice with installation circuits for pulsed rudder, Galloping Ghost Rudder/Elevator with or without engine control and simple dural proportional.
RC/735 3/6

AEROTONE
By Tommy Ives & P. Lovegrove
A single- or multi-channel tone set for modulated transmitters. Temperature stable, can be built for £4, weighs 2½ ounces, needs only two small batteries and measures 3 in. x 1½ in. Current rise from 0.2 m.A. to 4 m.A.
RC/728 2/-

Big Free Plan RADIO CONTROL *in May* MODELS

THIS IS GEMINI
GET YOUR FREE PLAN !

May number of *RADIO CONTROL MODELS & ELECTRONICS*, out just before Easter offers a grand specially produced full-size FREE PLAN to build 28 in. span high-wing trike u/c GEMINI which flies with an .049 and a sub-miniature Rx-single channel, either pulse or escapement. Construction of model, R/C installation, flying fully covered. Other special SINGLE CHANNEL NUMBER features include tests of no less than SIX different sets (Rx and Tx) plus building a sub-miniature receiver, plus miniature R/C aircraft plus Commercial Developments (what's new from Nuremberg etc.). First of new series "How to . . . " is devoted to Soldering. If you don't already read *R.C.M.& E.* regularly this is a wonderful issue to start with . . . from your usual model shop or newsagent. If not readily available (*it should be!*) send 2s. 4d. and the form below for YOUR copy.

Radio Control Models & Electronics, monthly 2nd Friday **2/-**

MODEL BOAT RADIO CONTROL

Considerably enlarged and brought up-to-date to include latest methods, transistor equipment etc. Apart from chapters dealing with general principles quite non-technical —and only enough given to suffice without overloading. Many sets and components described in detail, including Crystal Controlled Transmitter, Hard Valve Receiver, Single Valve Transmitter, Pulsing Control Systems Dual Purpose Pulse Box, Steering Unit Construction, installation of equipment, tuning testing etc. 127 pages size 8½ by 5½ ins., plus 8 pages art plates, 20 chapters, 8 appendices, 162 line drawings and circuit diagrams, 38 halftone pictures. **7/6**

R/C BIG 4

Caters for the man who has just bought his first R/C kit in which to install and fly his first equipment. The kits covered are: Mercury Galahad, Frog Jackdaw, Keilkraft Super Sixty, Veron Viscount. 64 pages size 8½ by 5½ ins., two-colour card cover. Copiously illustrated with plans, drawings, sketches, photos. **5/-**

SIMPLE RADIO CONTROL

This is the famous book by Harry Hundleby which sold some 40,000 copies, and has now been brought right up-to-date in line with modern practice by Tommy Ives. It has been written as a practical guide to radio control for those aeromodelling enthusiasts who wish to make their first attempt at this fascinating modern medium. Bound in stiff card with two-colour photo cover, 96 pages size 8½ by 5½ in., profusely illustrated with line drawings; plus eight art plates showing equipment and models; appendices covering battery equivalents and sockets, colour code for resistors and capacitors, etc.

6/-

USE THIS COUPON

Postage: Add 1/- up to and including 12/6; above that post free. Booklets: 1—4d.; 2 or more—6d.

AIRCRAFT IN MINIATURE	12/6 ☐	MODEL CAR RAIL RACING	5/- ☐	BOAT MODELLING	5/- ☐
FLYING SCALE MODELS	10/- ☐	SECRETS OF SHIPS IN BOTTLES	4/6 ☐	POWER MODEL BOATS	12/6 ☐
SIMPLE RADIO CONTROL	6/- ☐	AEROMODELLER ANNUAL 1962/3 Edition	10/6 ☐	MODEL AERO ENGINE ENCYCLOPAEDIA	12/6 ☐
MODEL BOAT RADIO CONTROL	7/6 ☐	PLANS HANDBOOK	2/- ☐	AEROMODELLER POCKET DATA BOOK	5/- ☐
CONTROL LINE MANUAL	15/- ☐	GLASS FIBRE FOR AMATEURS	7/6 ☐	R/C BIG FOUR	5/- ☐
DESIGN FOR AEROMODELLERS	5/- ☐	CARDBOARD ENGINEERING	5/- ☐	RADIO CONTROL MODELS (May)	2/- ☐
PLASTIC MODEL CARS	10/6 ☐			BOOKLETS (Insert ref. No.)	☐

Name

Address

Sum enclosed
£ s d

MODEL AERONAUTICAL PRESS LTD • 38 CLARENDON RD • WATFORD • HERTS

Telecont—Radio Control Equipment

Distributed by robbe

Tone Modulation ● No Tuning ●
Crystal Controlled ● Reliable ●
Proved and Field Tested for Two Years ●
Very Convenient and Easy to Use ●
Almost Foolproof ●

3 channel

5 channel

9 channel

transmitter in leather case

The small Transmitter with the large performance

Receivers: 3, 5 and 9 channel available

This space is intended for

exciting

robbe—Novelties

Available soon

THE MAIN FEATURES OF THE MODERN TELECONT EQUIPMENT

The fully transistorised transmitter is very economical and uses only 7 m.A. during signal pauses. The internal accumulators may be charged, without dismantling, by way of the special sockets fitted to the case. The transmitter is very small and easily handled and is fitted in an elegant and very good quality leather case—rather like a modern miniature camera. The robust fully transistorised receiver is fitted with an extremely sensitive relay that is not affected by vibration. Exceptionally stable, crash resistant, light and entirely reliable. Any Telecont receiver will work with any Telecont transmitter without further tuning of either the Radio Frequency or the Tone Frequencies. It has a careful and well planned plug-in system for connecting batteries and servos. Simultaneous operations in both five and nine channel receivers. The reliability and certainty of function is due to use of high class and reliable parts using the latest commercial electronic techniques. The men who make the Telecont equipment are proud of it and have great faith in it.

The new and exciting radio remote control unit TELECONT and all ROBBE construction kits are now available in Model Shops throughout the United Kingdom.

* * *

Visit your Local Model Shop or write for list of stockists of ROBBE goods to:—

Sole Distributors in
United Kingdom & Northern Ireland
SKOL-KITS LTD.,
166 Mile End Road,
London, E.1.
Telephone: Stepney Green 1972

representing

Manufacturers & Sole Concessionaires
robbe,
6421 Metzlos-Gehaag,
W. Germany.

U.K. Distributors abroad interested in securing Sole Agencies should apply direct to **robbe.**

Officially appointed Service Station for all Telecont Radio Control Equipment:- **Hancock & Smith, 52 High Street,**

Special!

NEWS FOR ALL MODELLERS —GERMANY'S LEADING KITS BY **robbe** NOW FREELY AVAILABLE THROUGHOUT GREAT BRITAIN!

Radio Controlled Scale & Stunt fully pre-fab kits

The models shown here are typical of this big, exciting range

DORNIER Do 27.
Takes 1 to 10 channel radio control, easily transportable, super prefabrication plus plan with 30 building stage pictures. You simply cannot go wrong with this fine scale design. Suits all engines 2.5 to 5 c.c. Wing span 54 inches, length 41½ inches. Price **£7.8.3** (including Purchase Tax).

THOR
Super Stunter, adaptable to all radio control systems, especially Telecont-9. Winner of many contests in Germany. Tough, practical, super prefabrication with simple construction for speedy building. Suits all 5—8 c.c. engines. Wing span 61½ inches, length 44 inches, average weight 46 ounces less radio. *The ideal design for all three channel sets.* Price **£7.8.3.** (including Purchase Tax).

CESSNA 182.
For free-flight or radio control, this scale design uses plastic parts as well as prefabricated balsa. A very popular model in Germany, it suits 2.5—3.5 c.c. engines. Wing span 48 inches. Price **£4.18.7** (including Purchase Tax).

Distributed in the United Kingdom and Northern Ireland solely by:—

Secure illustrated catalogue of aircraft, boats, radio, engines, brass marine fittings from your local model shop, or send 2/6d to:—

SKOL-KITS Ltd.

166 MILE END ROAD, LONDON, E.1

Telephone: Stepney Green 1972

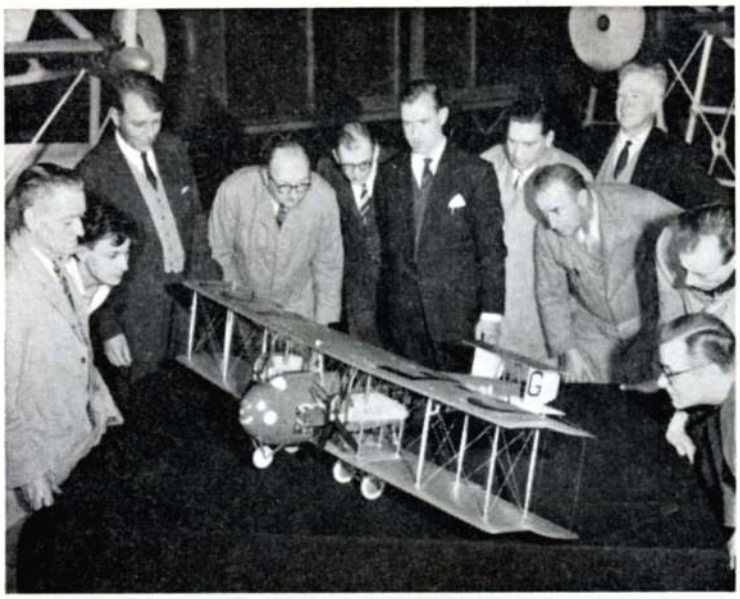

HEARD at the HANGAR DOORS

Skilled model craftsmen on the staff of the Science Museum admire the handiwork of Michael Shepherd (centre) when he recently presented this magnificent model of the Vickers Commercial Vimy for its new display. Brian Lacey (third from left) has been responsible for the re-arrangement of the Aeronautical Display, to be opened towards the end of July this year. It will contain many new exhibits, both full-size and model

Science Museum

MANY MODELLERS have asked us when the Aeronautical collection of the Science Museum, South Kensington, London, will be re-opened. Closed for practically two years now, this world famous exhibition has been sorely missed by visitors to London, while it has been rehoused in a completely new building, which resembles an aircraft hangar. During the closure, the opportunity has been taken to completely overhaul the existing exhibits and many new types have been added. No doubt including the *Me* 163*B* and *Cierva C*30 *(Avro Rota)*, which have been refurbished by R.A.F. Halton.

We understand that the Aeronautical collection will be re-opened to the public towards the end of July and will be one of the finest of its type in the world. One recent addition has been a 1/12th scale model of the Commercial Vimy made by Mike Shepherd, who works for Vickers. He has produced this magnificent replica from sketches, notes, photographs and personal reminiscences available to him at the Weybridge factory. The model even has a fully furnished cabin with seating for ten passengers, carpets, luggage racks, pictures, oak stained cappings all in miniature. It represents, 1,600 hours of spare time work and has thus far earned Mike 9 championship cups, 16 first prizes and 3 diplomas.

Mustang

The business of producing scale drawings is always fraught with hazard. If a publisher goes to the trouble of establishing the correct shape of an aeroplane, his work is often compared with inaccurate reproductions and sometimes discarded as being *the* inaccurate version! In addition to this, manufacturer's drawings are rarely presented with authentic outline, and are sometimes deliberately distorted in war time in order to avoid security leaks. A case in point is that of the Spitfire. When we published D. H. Cooksey's drawing of the Mark IX and XIV, this was the first ever accurate outline of the Spitfire wing plan to be issued. Similarly we were congratulated by Focke-Wulf for establishing the shape of the FW.190. Now in this issue, astute readers will perceive that our drawing of the P-51D Mustang differs from many others.

It is the result of considerable research and we can assure readers that every possible effort has been made to ensure authenticity. Dimensional data was unearthed from the N.A.A. archives at Akron, Ohio and with the kind co-operation of North American employees, who have preserved their Mustang records, draughtsman Bjorn Karlstrom has been able to piece together the many and various mysteries which have surrounded the shape of this seemingly well known aeroplane.

Bearing in mind that the Mustang is a popular subject for radio control scale model builders, we hope that our drawing and the marking information will be of particular assistance. Of special interest to Mustang enthusiasts is the news that Morgan Aviation Books, Box 20141, Dallas 20, Texas, U.S.A. are publishing a monograph on the P-51 which includes very useful information for model builders and the complete pilot training manual, at $2.95. All you need to know, including how to fly it! For a really colourful description of the Mustang in action, with many photographs of brightly decorated P-51D's, we can recommend "1,000 *Destroyed*", published in this country by Putnam at 50s. This is the story of the 4th Fighter Group, which originated from the Eagle Squadrons based at R.A.F. Debden during World War II. Two aircraft from this Group are illustrated on page 250.

Insurance Discriminations

The S.M.A.E. announces removal of the endorsement discriminating cover for various grades of member and henceforth there is no restriction on Associates in respect of contest flying. This means that all members enjoy the same cover for sport or contest flying without discrimination.

"Old Timers"

Influenced by the international interest in "Old Timer" events which have been reported in our columns, Walsall M.A.C. intends to hold a flying session some time during September/October and invites interested parties to contact I. B. James, 116 Birmingham Road, Aldridge, Staffs. They envisage a power model contest open to models which were designed before 1950. Makes us feel

quite young to see such a recent cut-off date! There will be two classes, one for spark ignition engines the other for diesel and glowplug engines.

Oui ou non!

IT IS DISTRESSING to know that as a result of a disagreement amoung our French friends over the R.O.G. rule, participation of France in our second annual challenge match for *Coupe d' Hiver* models has been annulled.

This model class was originally conceived by Maurice Bayet, editor of "*Le Modele Reduit D'Avion*". He intended it as a class to follow the tradition of the Wakefield trophy, retaining the fuselage cross section regulation, and a rise-off-ground requirement for each flight. Many modellers have respected his adherence to the classic form of rubber driven model contest and have realised that the reason for the rise-off-ground rule is to ensure that all entrants start at a common level and with an unassisted launch.

However, it would appear that during the conduct of the 1962 final in France, the contest director allowed hand launching. In ensuing correspondence it was agreed with the F.N.A. that Maurice Bayet would be able to take part in the organisation of the final championships in 1963, to supervise take-offs. Having nurtured the class over so many years, sponsored innumerable competitions and resisted all attempts to change the formula and rules, it was really a matter of honour that M. Bayet should be the right person to administrate.

Despite prior agreement, the F.N.A. subsequently informed M. Bayet that he would not be able to assist at the 1963 final and in logical consequence, he has withdrawn his support for the final, where we presume, the French will be permitted to hand launch.

Those who have flown to the *Coupe d' Hiver* formula realise that the R.O.G. rule requires no more than a small strip of linoleum, or even a model box top for a take-off point. The argument that field surfaces are unsuitable and that R.O.G. is hazardous, are pure excuses issued by and for lazy modellers who have found advantage of hurl launches through their experience with the present day Wakefield and F.A.I. power events. We fully support M. Bayet in the application of the rise-off-ground rule and indeed know that we are supported by many of the participants in the British section of the Anglo-French challenge. Our friends in the U.S.A., in particular those at Illinois, who have organised an international postal event also intimate that the R.O.G. rule is essential to the class.

When rubber motor runs are reduced to 15 seconds, or even less with a *Coupe d' Hiver* model, there is a great danger of it developing into an event where the force behind the throw is decisive if hand launch is to be allowed. We look forward to the day when the administration of the F.N.A. will see reason on this point and restore the competition in France and our Anglo-French challenge to its original regulations.

U.S.A.F.—U.K. Meet

The 1963 Annual U.S.A.F. Championships are to be made open to all A.M.A. and S.M.A.E. members in the United Kingdom. They take place on June 15/16th at R.A.F. Station Woodbridge, 15 miles north east of Ipswich, Suffolk. Events include all free flight classes. Naturally these are to A.M.A. regulations with division into classes A/1 and A/2 for glider, ½A, A, B and C in power, with the same categories also used for control line speed. There will also be A.M.A. team race (5 c.c.), Rat racing, chuck glider, scale, stunt, combat and the three A.M.A. classes of radio control.

Event registration must be made prior to May 27th with Captain R. A. Hanson, 91st T.F. Squadron, R.A.F. Station Bentwaters, Suffolk (near Woodbridge). Flying commences at 1 p.m. June 15th, concludes 5 p.m. on June 16th, followed by victory banquet and trophy presentation. Camping facilities with all mod. cons. (electric power too!) will be provided for S.M.A.E. visitors and a small entry to the field charge will be levied on spectators to help defray costs.

Coming two weeks after the British Nationals, this promises to be a very popular and "international" week-end on home soil and our thanks are due to our U.S.A.F. hosts for their generous invitation to British modellers.

Sign of Service.

Look for this transfer in your local model shop

Sign of Service

Bright black, yellow and white transfer discs have now been issued to all agents for AEROMODELLER PLANS SERVICE. Look for this sign at your local model shop and you can be confident that any order placed with the proprietor will be met by direct supply to either the model shop, or the customer, within 48 hours of receipt at our offices.

In this way, modellers can discuss their choice of plan, taken from our 164 page fully illustrated Plans Handbook, with experts at the model shop, place their order, and in most cases can have their materials packed up ready for collection with the drawing on their next visit to the shop.

Jennifer Hardman holds John O'Donnell's *Coupe d'Hiver* model. 16 in., two blade folding prop is driven by five strands of Pirelli. Provisional results published last month are now confirmed, making John 4th in the 1963 contest. Jennifer works for the same Company as John and has obviously been expertly tutored in the correct way to hold a model!

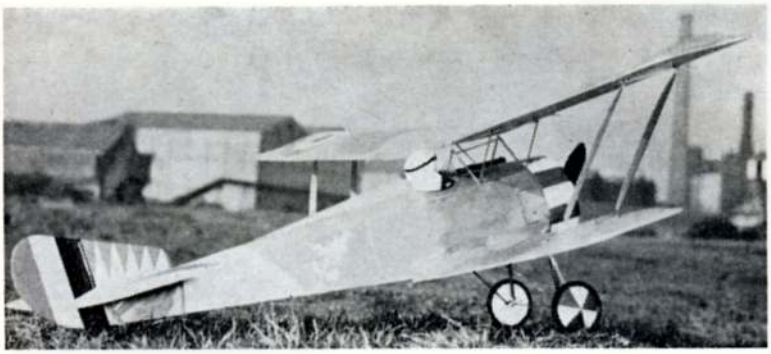

HANRIOT H.D.1

Model on the COVER!

One-twelth scale 28" model for ·5—·8 c.c. featuring simple construction and stable flight. Designed by B. J. Rogers

WE ARE ALWAYS being asked for a genuine flying scale model to suit the .5 to .8 c.c. category, which must be simple to build, easy to fly, crash resistant and above all, colourfully realistic.

As our cover shows this month, there is one aeroplane which meets this specification ideally and that is the Belgian fighter of World War I, the Hanriot Dupont H.D.1. Featured as our "*Aircraft Described*", No. 94 by Peter Gray in AEROMODELLER for November, 1958, the Hanriot attracted B. J. Rogers into scaling up a 1/12th model for his elderly, but faithful, Elfin .5 c.c. diesel.

The subsequent result exceeded all expectations and during the course of a visit to our offices, Mr. Rogers mentioned his model. We were attracted by his description and as a result, he left the model with us for us to make a personal examination and to conduct flight tests.

These were quite exciting, provided one is prepared to forget our struggle with a rather well worn power plant which seemed adamant to operate on anything other than gravity feed. The model flies beautifully and even when we managed to get an unwanted right-hand turn, the only damage in the subsequent prang was a crushed longeron, and that was caused by an over anxious editor and not due to the impact.

So here we have something which so many readers have requested and with the bright colour scheme suggested by our cover and on the plan, we fancy there will be a lot of H.D.1 models flying this season.

About this colour scheme. It was taken from Jean Noel's drawing in December, 1960, Royal Air Force "*Flying Review*". No claim was made for any particular pilot using the scheme involving the green and white stripes, however, it is established that the 9th Squadron in which those Aces, André de Meulemeester and Willy Coppens served, carried a white thistle insignia on the camouflaged fuselage sides. Other colour schemes are described for Italian and American H.D.1's in our scale plan 2713, available from the editorial offices, to 1/72nd and 1/48th scale, price 3s. per pack including post. Several H.D.1's are still preserved in Belgium, the U.S.A. and there is also one in the Shuttleworth collection at Old Warden, Biggleswade.

The fuselage sides are built over the separate plan using medium to hard grade balsa, ensuring that the pieces of ⅛-in. sheet are hard and the slot for the lower wing tongue box is at the correct angle. The engine bearers are now well cemented to F.9 and F.10, care being taken that the essential side thrust is correct. Next, cement the fuselage sides to the engine bearer assembly, each being keyed when pushed into slots in F.9. Add remaining stringers to complete a basic box fuselage.

Centre section struts are now sewn along the bottom of F.1, cemented in position and rest of fuselage top completed. Build tongue box, fuselage side fairings and install engine and tank. There is ample room inside the cowling for the tank and the fuel leven can easily be seen through the aircsrew disc.

The cowl is quickly built from three or four pieces of ⅜-in. sheet. A series of saw cuts, approx. ⅛-in. apart, are filled with cement and the sheet bent to the correct radius. Final shaping and sanding of the cowl is best carried out when cemented in position.

Next, add the undercarriage struts and the axle which can either be soldered to the legs or held in position by small rubber bands. For the wheels, the ply discs are first cut and the bushes added and cut off flush with the nut. The tyre is ribbed Ripmax fuel tubing, slit down one side and glued and pushed over the ply disc. *Bondfas*

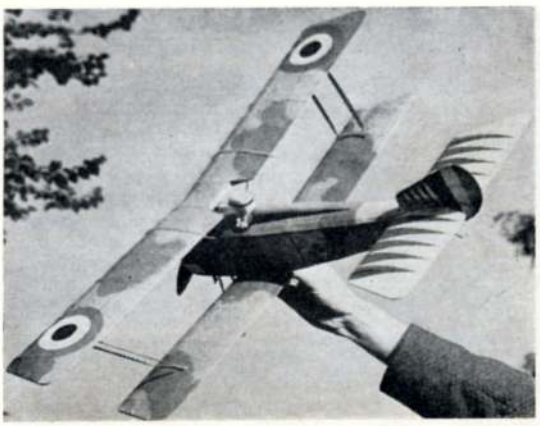

Heading picture and view at right display the bright green and white decoration applied to this "Thistle" Squadron Hanriot, to be seen in actual colour on the cover. This is not only a brightly coloured scale subject, it flies well and has practical, simple features to make it a good subject for the novice

Nose detail of the prototype emphasises the simplicity. Upper wings are supported by wire centre section struts. Henri le pilot is not in the least worried as everything flies apart in a prang

or similar P.V.A. glue must be used here and we have yet to shed one of these simple tyres. Retain the wheel to the axle with solder and add card cover.

Mainplanes and tail unit are orthodox, but do not use soft balsa. Riblets may be omitted if so desired. For little extra work however, they do give a stronger and more "real" appearance. The length of the struts must result in both upper and lower wings having the same dihedral.

The model is covered with lightweight tissue and clear doped. Camouflage and the light blue underside is easily applied with a small piece of synthetic sponge (from Woolworths!) and with little practice, a thin and even coat can be achieved. No thinning of dope was found to be needed and it has the great advantage of nothing to clean afterwards, just throw the sponge away. Remaining decor is applied by brush and the transfers are made by painting over a gummed label backing, as described in *Flying Scale Models*. Finally, fuel proof the model. Now trim for the glide. The original only required a piece of 2-mm. ply under rear of tailplane. Slight right rudder should be required and with the sidethrust incorporated, build up from low revs. to give a left-hand climbing circle under power, turning into right circle on the glide. A 6 x 4-in. prop was found to give by far the best results. If .8 c.c. is used, some downthust may be necessary, the light loading makes it a lively performer.

No prizes offered to the first to make a Radio Controlled version. It's a natural subject for single channel!

FULL SIZE COPIES OF THIS 1/5th SCALE REPRODUCTION ARE AVAILABLE AS PLAN FSP837. PRICE 6/- PLUS 6d POST FROM PLANS SERVICE

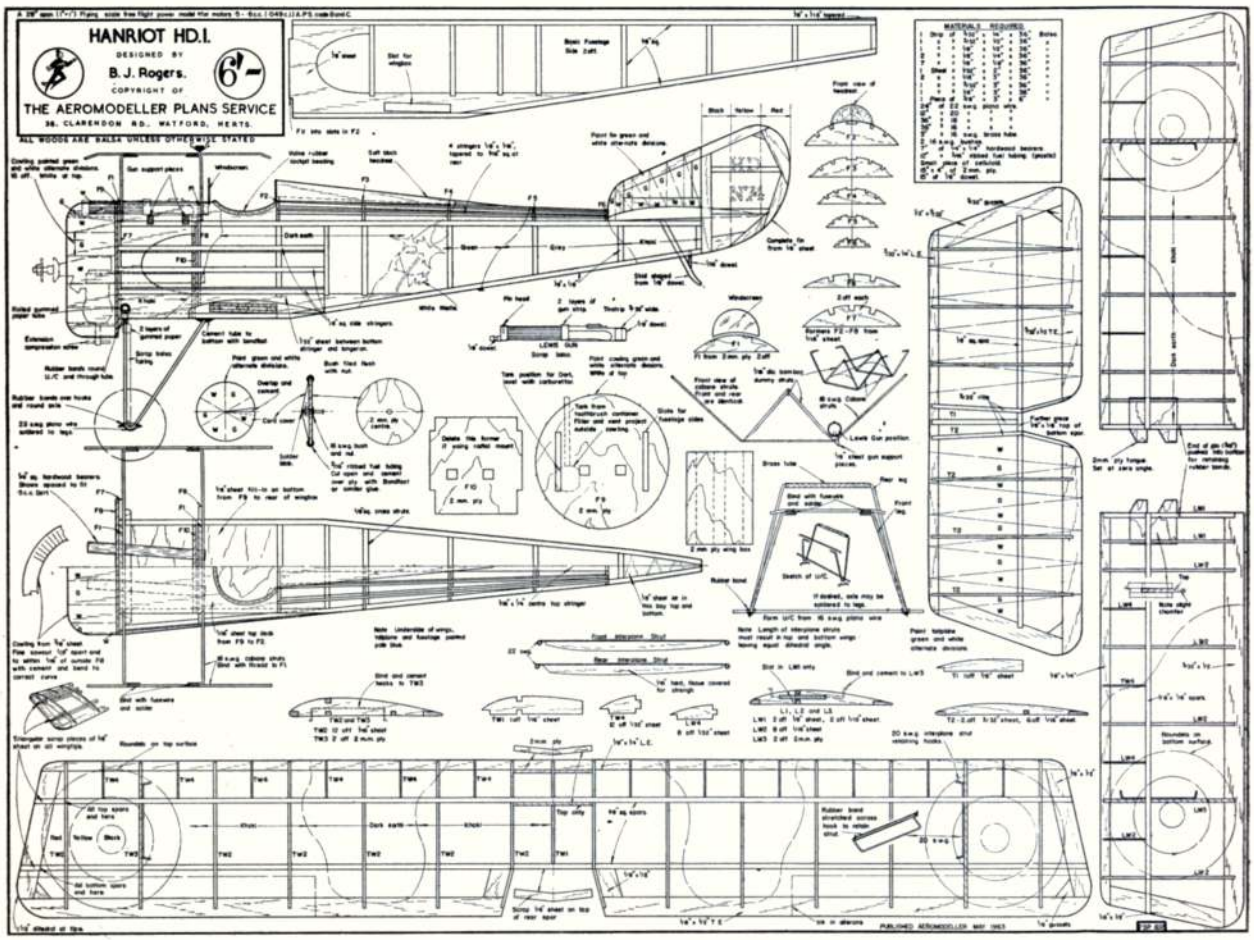

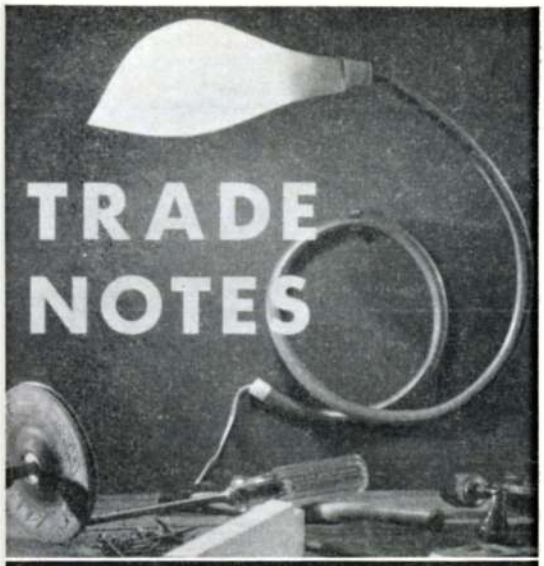

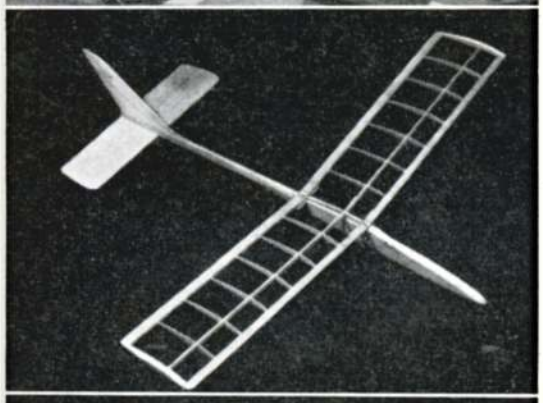

Top, the Bendalux light over the work-bench attached to wall clip. Next Veron's Dominette framework shows the simple but attractive lines which offer no difficulty to the younger modeller, but still call for wing construction and covering. Above, the Williams Brother's pilots compared with British 3d. piece show 1/12th, 1/8th and 1/6th scale jet pilots ready for painting and with moveable sun visor. Right, the Enisprae in action. Can be used for water, clear dope or colour application with 70 lb. pressure, delivering 32 fluid ounces per cylinder

A NOVEL HANDY LAMP has just been marketed under the name of *Bendalux*. We find it ideal for bench use, as the stiff plastic supporting stem can be hand moulded to any shape so that the lamp will support itself, or can be clipped to a wall or bench, then twisted to shine in any direction. This retails at 27s. 6d. The manufacturers are **Brigstowe Products,** Kingswood, Bristol. It also happens to be a very handy light to have about the house when looking for that 10 B.A. nut that fell into the carpet, or crawling under the car to adjust brakes, etc.

Veron's *Dominette* has now passed a full flying colours test after construction by our 11-year-old neighbour. Once more we must congratulate designer Phil Smith for something that blends pre-fabrication and a requirement for initiative. This was young tyro Nigel's first effort at covering and though, admittedly, he made a wrinkled mess of the first attempt, the covering exercise did at least teach him to remind us that we were forgetting to stick the tissue to the undercamber (according to instructions), when we were supposed to be showing him how! Nice flyer too—one we can thoroughly recommend as an introductory design for the 10 to 12-year-old, with an impressive 28-in. span for 9s. 11d.

Lines Brothers are putting out their 1/72nd scale series of unusual, but nevertheless, very attractive war-time subjects at the rate of one a month. We specially like the latest which is the *Proctor IV* trainer in their "blue" series at 2s. 11d., and which joins the *Hotspur II* glider in "red" series at 3s. 11d. **Frog** have a stream of these less common but popular types in line for production. They have also released their *Handley-Page Dart-Herald*, which has made up nicely in Jersey Airlines colours. This one sells at 12s. 3d.

Wolverhampton Models and Hobbies sent us down a spray unit to try, selling at 21s. 6d., known as the *Enisprae*. This comprises a pressure pack filled with liquid gas at 70 lb. per sq. in. pressure, coupled to a specially designed spray head over a replacement bottle (two supplied in each pack), the unit will spray 32 fluid ounces per cylinder. Pressure is adequate for model work with thin dopes and the degree of control with the Aerosol valve, sufficient to cope with quite fine work. Certainly this is a very handy approach for the modeller who likes to obtain a professional finish without investment in expensive compressors and spray guns.

Granger Williams (whose *Able Gull* team racing design was published last month) markets a wide range of moulded accessories, some of which are now being imported into this country, including pilots and scale vintage aircraft wheels. The former are available in 1/12th, 1/8th and 1/6th scale and the latter from $1\frac{7}{8}$ in. up to 5 in. diameter. They certainly add a neat finishing touch to a model.

Incidentally, those Blind Nut Fixings we illustrated in last month's Trade Fair News are made in metric sizes by *Webra* of Berlin who displayed them at Nuremburg.

The **Swedish** Winter Championships were held at Soderfors in bright, calm, 15 degrees below zero weather on 24th February. 200 Competitors took part in this event over the Dalalven River Delta. Without doubt, the young man of the day was Hans Wassen, who retained his junior F.A.I. power championship with 836 seconds (*see photo*). In senior, Haken Broberg of Borlange, had a walk over in the fly-off with his Super Tigre G.20 *Pulteri*, after fellow competitor Bo Wall of Uppsala, had the misfortune not to be able to start his Super Tigre G.20J. glow engine. (Common complaint this in extreme cold temperatures and one which can be explained easily where dry batteries are used. No dry battery manufacturer will claim that his products operate satisfactorily in low temperatures. To quote one battery engineering manual, "after prolonged exposure to about minus 10 degrees F. they will become useless, even on light drain . . . service life at low temperatures is reduced because of retarded chemical action within the cell".) Senior Wakefield provided a thrilling five-man fly-off, which went through to a seventh round, when Ake Quarnstorm of Stockholm, collected the championship with 1331 seconds. Eighteen of the entrants had a total of more than 800 seconds, while Junior Champion was Bo Pettersson of Uppsala. A/2 Champion for the year is Bror Eimer from Stockholm, the only one to score five maxes, although five other competitors had four maxes and the Junior Champion in this class was Svante Jansson of Coping, flying a Gerry Ritz design.

In both Senior and Junior categories, club team vistory went to Uppsala, who scored 2,677 out of a possible 2,700 seconds in the Senior class—quite the best yet in these high standard Swedish events.

To give one an idea of the organisation of such a truly champion club, it is of interest to know that it is one of the largest in Sweden, comprising of about 90 aeromodellers among a total of 270 members of the Uppsala Flygklubb. The club is separated into three sections. For full-size power flight with eight aircraft, ranging from a 50 h.p. Taylor-Craft to a brand new Cessna 172B; the gliding section has five sailplanes and a Tiger Moth tug, and the model section. The club is intensely interested in competition flying and made a collective return in our recent readers' survey which leaves one in no doubt as to where their main interest lies!

Another control line circle has been opened, this time for the Rand M.A.C., based at Johannesburg, **Republic of South Africa,** where the Transvaal C/L Championships were held on opening day, 17th February.

It had to happen sooner or later—one of the control line experts, who has taken up multi-channel radio control, has been experimenting in C/L stunt techniques with radio control. Chuck Hayes of Los Angeles, **U.S.A.,** is first, to our knowledge, to employ coupled flaps and elevators and according to reports, he is using them to very good effect in winning competitions. If square loops, triangles, hourglass, etc., are to be added to the R/C aerobatics schedule, then flaps of this type will have distinct advantage, but is this the end? Shall we next see asymmetrical wings to compensate torque affect, or tanks so devised to make the engine pull with more power at critical attitudes? Incidentally, hot news from those parts tell us with good authority that *Orbit Electronics* have taken over financial command of *Space Control*. Such a combination of reputations should most certainly result in an outstanding effort with proportional control systems.

Shanghai, China is latest source of production model diesel engines. The Yin-Yan 2·47 *(Silver Swallow)* is a very neatly cast and finished front rotary valve diesel which we are currently checking. Selling cheaply in Hong Kong, it bears slight resemblance to Hungarian products.

Heading shows Hans Wassen, who was 1962 Swedish Junior Champion in F.A.I. Power with a Pulteri, now seen here with his 1963 winning Pladuska, which we detailed in Contest Designs, January issue. Hans is only 12 years old and his models are among the best built in his country thanks to good instruction from his fellow clubmen in Uppsala. Below, elegant construction and fish-like fuselage lines, on this Italian vane steered slope soarer from Verona. Bottom, Dutch stunt control line flyer, Willy van Dorp is also a scale enthusiast. His version of the Waco Biplane has an 8 c.c. glow plug engine and will go through most aerobatics.

ENGINE ANALYSIS No. 109 by R. H. Warring

COX TEE-DEE ·09 and MEDALLION ·09

THESE TWO ENGINES, virtually identical except for the carburettion, represent a typical example of "Cox" standards—and still leaves us puzzled as to how they do it! The "Medallion" is rated as a sports engine with a typical (but very good) 1.5 c.c. sports performance. The Tee Dee is so close geometrically that you can swop over virtually any part with the Medallion—cylinder, piston, shaft all interchange if you care to try it—but its performance is quite exceptional for an engine of this size. The only *apparent* difference is that the Medallion employs conventional spraybar carburettion and the Tee-Dee the Cox-originated annular mixing chamber with three small holes opening into the venturi throat—plus two transfer ports instead of one. With perfect logic, you pay more for the performance of the Tee-Dee—which is not just the difference in carburettor cost—although we suspect there is a little more to it than that. Although all Cox engine parts are made to very close tolerances we suspect that Tee-Dee production takes the best and closest match and the Medallions the general production run. Suffice it to say that the fits and tolerances on the latter are quite exceptional by any standards.

Both engines represent excellent value for money, with a "de luxe" appearance and workmanship and performance to match. To the British modeller used to diesels they are a little "soft" and need that much more care in handling, particularly if disassembled. The prop. shaft screw is soft steel and readily bent, for example (but just as easily replaced). The cylinder is soft and readily burred or even distorted unless the proper tool is used to unscrew it. Yet it is more than tough enough for the job for which it is designed and very much thicker walled than the original Cox cylinders produced for their first crankcase rotary series. Crankshaft diameter is also very generous at $\frac{3}{8}$ in. for a glow motor of this size, although the beam strength is somewhat reduced by the large central hole (17/64 in.) and the massive rectangular port opening measuring approximately $\frac{3}{8}$ in. by $\frac{1}{4}$ in. The shaft is hardened, as is the piston and connecting rod with the characteristic ball-and-socket little end introduced on the original models (but subsequently abandoned in favour of a conventional gudgeon pin on the 2.5 c.c. Cox Special).

A hardened steel con. rod running on a hardened steel crankpin is not, theoretically at least, a good wearing combination but presumably is dictated by the con-rod requirements and we hesitate to advance the remark more than as comment, rather than criticism. The big end fit in any case is beautifully accurate, with provision for adequate oil lubrication via drilled hole in the end of the con. rod.

The crankcase unit is machined from solid bar stock in the characteristic Cox manner of production and seemingly electro-polished after finishing. Over this fits the plastic moulding carrying the intake tube and carburettor assembly, held in place by a threaded collar screwing onto the front. The intake port on the crankcase

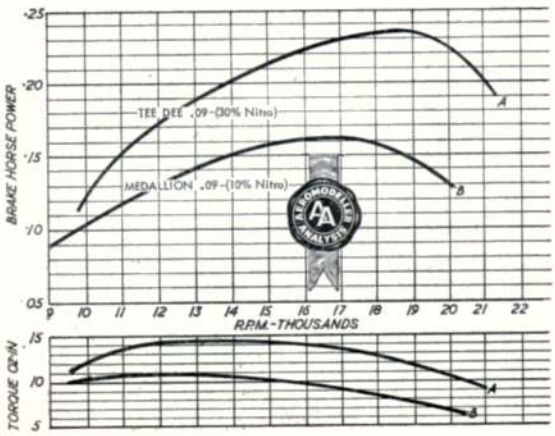

Propeller r.p.m. figures

	Tee Dee 09	Medallion 09
6 x 4 Top Flite	19,500	17,200
7 x 4 Top Flite	15,500	12,900
8 x 4 Top Flite	13,200	11,300
9 x 4 Top Flite	8,700	7,700
6 x 4 K-K nylon	19,000	17,100
6 x 3 K-K nylon	20,800	19,200
7 x 4 K-K nylon	15,400	13,300
8 x 4 K-K nylon	12,200	10,300
6 x 4 D-C nylon	20,000 plus	—
7 x 4 D-C nylon	15,900	14,200
Fuel used:	*Cox Nitro* 30 *Racing fuel*	*Cox Thimbledrome glow fuel*

DATA

Displacement: 1.497 c.c. (.0914 cu. in.
Bore: .497 in.
Stroke: .471 in.
Weight: Medallion 09—2⅞ ounces
Tee Dee 09—2⅞ ounces
Max. power: Medallion 09—.162 B.H.P. at 16,500 r.p.m.
Tee Dee 09—.235 B.H.P. at 19,000 r.p.m.
Max. torque: Medallion 09—11 ounce-inches at 12,000 r.p.m.
Tee Dee 09—14.7 ounce-inches at 14,000 r.p.m.
Power rating: Medallion 09—.108 B.H.P. per c.c.
Tee Dee 09—.1575 B.H.P. per c.c.
Power/weight ratio: Medallion 09—.059 B.H.P. per ounce
Tee Dee 09—.086 B.H.P. per ounce.

Material specification:
Crankcase: light alloy, machined from bar stock
Cylinder: mild steel
Piston: steel with hardened walls
Crankshaft: hardened steel
Connecting rod: hardened steel (ball and socket little end)
Cylinder head: light alloy
Crankcase back cover: light alloy
Carburettor: plastic housing with pressure tap (blind as supplied)
Medallion 09—brass spraybar and steel needle valve carburettion
Tee Dee 09—light alloy intake tube (venturi) with peripheral jets; needle valve in separate housing feeding into annular passage connecting jets
Prop. driver: light alloy (anodised gold on *Tee Dee* 09)
Propeller shaft: diameter mild steel screw cadmium plated)
Aluminium spinner with *Tee Dee* 09

Opposite, parts of Medallion .09 displayed to show one piece carburettor moulding, only external distinction. Above is precision throttle control, to sell in U.S.A. at $4.50 for .09, providing low idling speed and no reduction in top r.p.m.

unit is cut right across so that when the plastic moulding is fitted a sort of expansion chamber is formed immediately above the port opening. In the case of the Medallion a conventional venturi-shaped intake tube is formed integral with the moulding with a circular opening at the bottom of modest diameter. The Tee-Dee moulding carries a short stub intake only, into which a machined dural venturi tube screws, this being of true venturi shape with the bore diverging after the throat. A collar attachment encircles the dural venturi, carrying the needle valve metering the fuel via a single hole into a grooved passage around the outside of the venturi throat. Three very tiny holes circumferentially disposed then open from this annular passage into the venturi throat. Both mouldings have a side pipe for drilling through to provide tank pressurisation if required, timed by the shaft rotation.

Cylinders are machined from mild steel, and quite heavyweight in construction by Cox standards. Diametrically opposed exhaust ports of generous area are cut in the cylinder walls and in the "pillar" space between them a scalloped transfer passage is cut on the inside walls. The top of the transfer passage is arced, giving virtually 100 per cent. overlap at first opening. The Tee Dee has two such transfer passages (one in each "pillar" space, and the Medallion only one, this—apart from the carburettion—being the only real geometric difference between the two engines. Fitting the Medallion cylinder to the Tee Dee, incidentally, more or less reduces it to "Medallion" performance, showing that the difference in performance between the two relies mainly on improved carburettion and getting more fuel through the engine more quickly.

The pistons are of lightweight construction with extremely thin walls. Only the outside walls are hardened, the inside and top being copper plated to retain them in soft condition and make it possible to peen over the ball-end joint. The piston top is flat with only a slight edge radius. Cylinder head is a dural turning with integral glow element, screwing into the top of the cylinder and seating on a copper gasket. This is the only gasket used in the whole assembly, although the Tee Dee does carry a very thin laminated plastic spacer behind the propeller driver which also acts as an oil seal.

The crankcase back cover is a straightforward light alloy turning which screws directly into the crankcase unit. Distinguishing features between the two engines, apart from the appearance of the intake, are that the plastic intake moulding is red in the case of the Medallion and black in the case of the Tee Dee, whilst the Tee Dee prop. driver and carburettor collar are anodised gold. A chemically-treated (blacked) cylinder is common to both engines. The Tee Dee is supplied with a longer propeller screw and spinner in place of the short screw and washer on the Medallion, but these two fittings are interchangeable, if desired.

Despite the light weight of the reciprocating parts, and the counterbalance crankshaft, both engines are fairly susceptible to vibration and for best performance careful attention is necessary to propeller balance. This is largely due to the fact that both are high-revving engines. Whilst the "09" may appear to run quite well on an unbalanced load, a considerable loss of r.p.m. can result, as well as a considerable amount of engine vibration.

Starting and handling characteristics on both engines

Continued on page 235

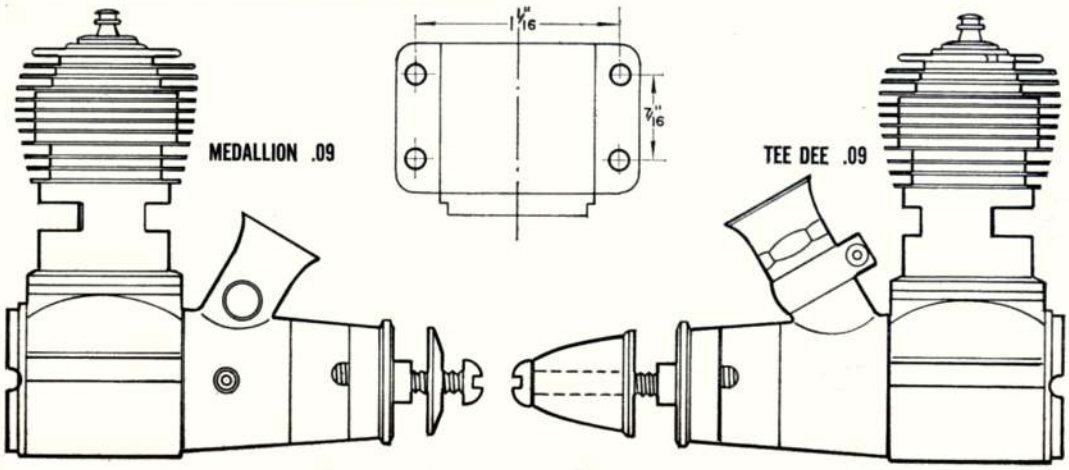

HINTS 'n TIPS

by Jim Baguley

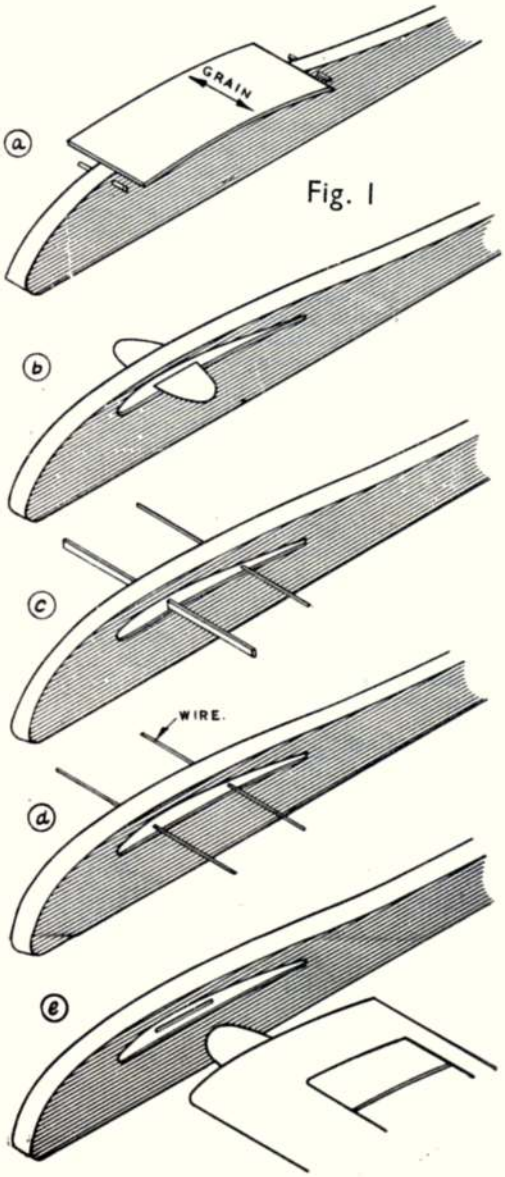

HERE ARE A few pointers which will help the less experienced modellers to proceed with designs for the 1963 season. We deal with some aspects of glider construction on which it is sometimes difficult to make up one's mind as to the ideal line of approach. Wing attachment to the fuselage, auto rudders and fins can be produced with so many variables and these suggestions are given to help those who can profit by a little design direction. We deal first with the question of how to mount the wing on the fuselage.

Refer to *Fig.* 1. If the wing is flat on top of the fuselage then type (*a*) is usually used. Dihedral can easily be supported by runners along the edge of the platform. We can also attach two-piece wings in this manner, but there is also the possibility of mounting the wings directly to the fuselage side with no protrusions such as dowels and rubber bands. Various systems are shown and in each case the wing may either plug into recesses in the fuselage sides or if sufficient anchorage is provided, may merely fit flush to the fuselage sides.

In both cases ply or hardwood facing where the end wing rib makes contact is recommended.

In each case, the tongue (*b*) or tongues may be either detachable or permanent. In the latter case it is usually screwed to a hardwood block built into the fuselage structure or fits into slats in plywood reinforcing. It is suggested that (*c*) and (*d*) can have a free tongue which merely slips through say ⅛ inch ply facings internal or external. With (*e*) the tongue will usually be built into slats in the ribs and a ply box will be provided in the fuselage which must be broad. The two tongues can also be superimposed if a thick section is employed.

The author's preference is (*c*) which is also the simplest approach, using a dural tongue which glides into a mainspar ply box, and a rear piano wire locating tongue into a tube. The essential is to see that anchorage of fittings in the wing are firm and will not easily break away, for example during the extra stress of a towline launch.

Fin Construction

Refer to *Fig.* 2. The simplest yet is (*a*) but it is susceptible to warping and stalling. ⅛ in. sheet should be selected for straight grain and any doping must be equally applied on each side and almost simultaneously in order to avoid a twist developing. One can fit an inset section of ⅛ in by ½ in. balsa at right angles to the fin grain, this helps to maintain rigidity.

A popular type is (*b*). This can be improved by laminating the outline as in (*c*). The author's favourite is (*d*) which is as light as any of the others for this configuration and is simpler than (*b*) and (*c*) yet equally warp resistant. It uses nothing but ribs, sides and possibly "posts" for division into fin and auto-rudder after construction. 1/16 in. and 1/32 in. sheet covering are used, and the thick section offers insensitivity to trim changes, which is an advantage.

Auto Rudders

Torsion sprung auto-rudders as shown in *Fig* 3. instead of the usual rubber band and horn, they have hit no snags. Use thin piano wire which is bent in hairpin spring shape, anchored to the rudder and fuselage so that it will push the rudder over to the stop for glide trim setting.

A horn must still be used for pulling the auto-rudder straight for the towing stage. The pin and tubing hinges are also an improvement over the normal tape hinge shown in *Fig.* 4. The sandwiched tape system shown in *Fig.* 5 is also good. It is made up of two layers of 1/16 in. sheet and has the tape in between. Use P.V.A. or Impact (*Evostick*) cement.

The form of auto-rudder actuation normally used by the

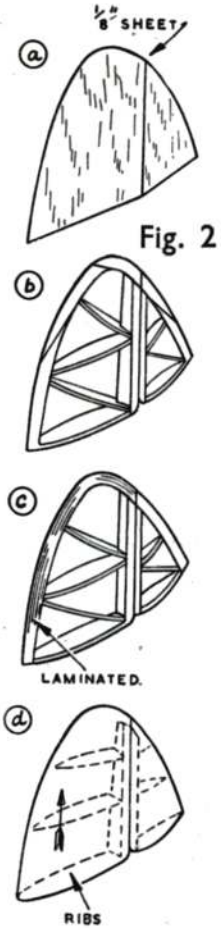

Fig. 2

author in conjunction with the tow hook is shown in *Fig.* 6. The only reason for using another system comes when a dethermaliser timer is employed and this is best actuated by a pin.

In this case the auto-rudder and timer can best be actuated by the same pin and a fixed towhook can be used. The auto-rudder line can easily be made internal by taking it into the fuselage via tubes.

The purpose of the auto-rudder, for those which are still mystified, is to keep the model in as straight a path as possible while it is being pulled up on the tow-line prior to the launch. When the towing ring is engaged on the fuselage hook, some device must be arranged whereby a line pulls the rudder straight. Then, when the towing ring falls free on the launch, the rudder flicks back to its pre-set angle for the degree of turn required in flight. There are many ways in which this can be executed, *Fig.* 6 being one of the simplest. An alternative is to have the auto-rudder (a/r) line attached to a small ring. A pin on a short length of cord, is attached to the towing ring, and we can lock the a/r line ring in the forward, tensioned, position during the tow by pushing the pin through the small ring. When the towline falls away it will also pull out the pin. The same pin idea is used, as suggested above, for tripping a dethermaliser timer. Perhaps these explanations will help to explain some of the mysteries of aeromodelling, for novices.

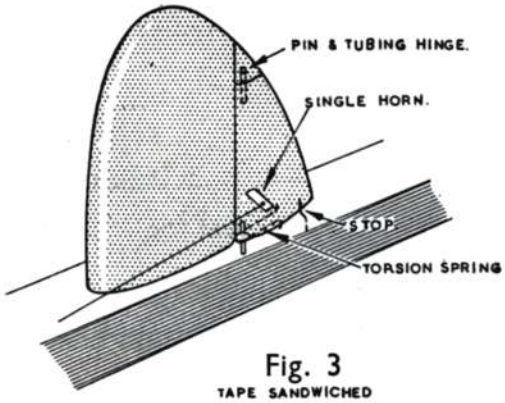

Fig. 3

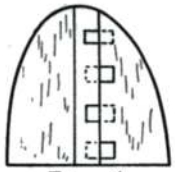

Fig. 4

Fig. 5

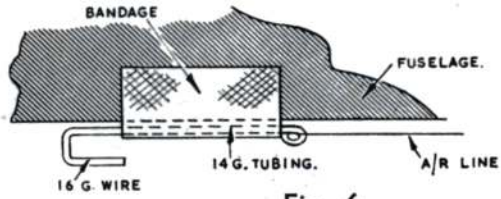

Fig. 6

ENGINE ANALYSIS

COX ·09's continued from p.233

are good—the Medallion being somewhat easier for starting, perhaps, but despite its outstanding high speed performance the Tee Dee remains a remarkably good mannered engine—provided you flip it over fast on the smaller propeller sizes. Both engines like running fast and the Tee Dee, in particular, proved a bit rough and uneven at lower speeds, with a noticeable fall off in torque below 12,000 r.p.m. On the other hand it ran most smoothly and consistently at higher speeds, even when taken up well beyond the peak. We feel that the performance could be still further improved on the test figure achieved, although any further increase in nitro content of the fuel would undoubtedly lead to a much shortened element life. For all normal contest requirements the Tee Dee should give an outstanding account of itself on 25—30 per cent. nitro fuel, the Cox "Nitro 30" racing fuel now readily available in this country being an ideal match.

The Medallion, on the other hand, will run on "straight" fuels, although handling characteristics deteriorate somewhat and 5 or 10 per cent. nitro is advisable for easy starting and consistent running. Like its more powerful counterpart it is smoothest running in the high speed range—e.g. approaching 15,000 r.p.m. and above—and should not be over-propped.

Both models have been specifically reduced to an International contest size. The usual American "09" usually runs nearer .099 cu. in. in displacement, or 1.6 c.c. With a bore and stroke of .497 in. and .471 in., respectively, the actual displacement of the Cox "09's" is .0914 cu. in. or 1.497 c.c. As a contest engine the Tee Dee is particularly remarkable both for its exceptionally high specific power output (.1575 B.H.P. per c.c.) and power weight ratio (nearly .1 B.H.P. per ounce).

We imagine that neither of these two Cox 09's needs any specific recommendations from us as their performances on the flying field will undoubtedly speak for themselves in the coming months. The Medallion is an exciting and extremely powerful 1.5 c.c. sports engine with a performance not far removed from contest standards. Shortly, too, it will also be available with a throttle, when it will probably become a good choice for medium sized radio control models. The Tee Dee 09 has a performance potential better than that of any other 1.5 c.c. production engine that we know—diesel or glow—and this is one that could rule the 1.5 c.c. class.

Note: Trim model right/right. Up to 1/32" right thrust may be needed

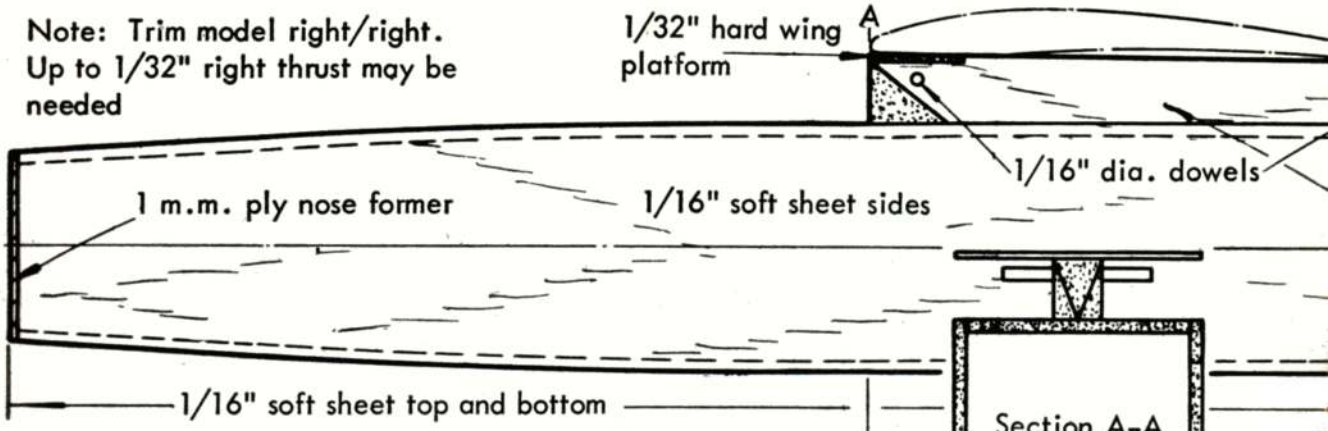

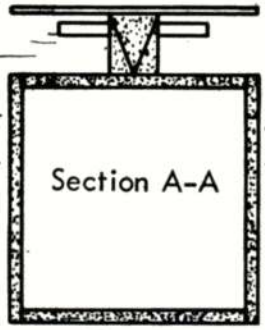

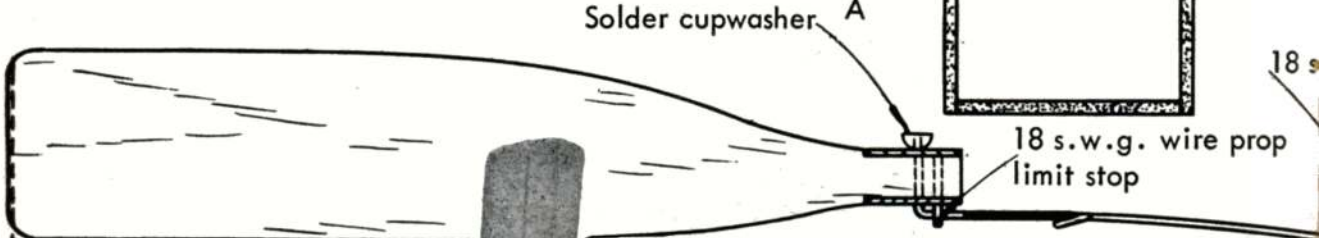

Fuselage and Fin	0.5	ozs.
Wing	0.2	"
Tailplane	0.075	"
Prop assembly	0.2	"
Motor	0.3	"
Total	1.275	"

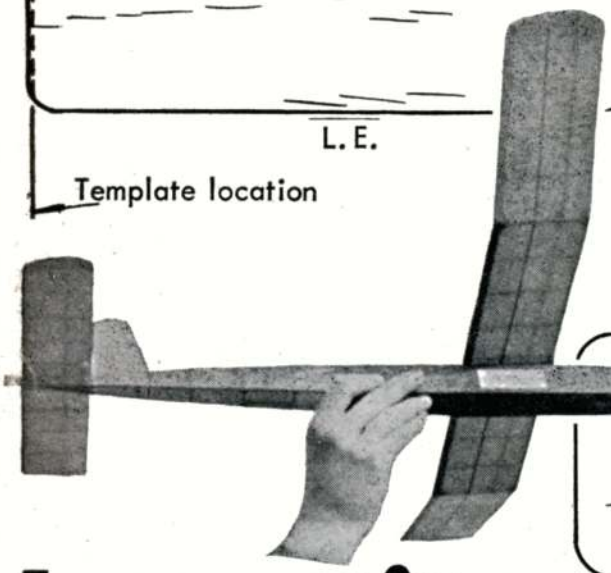

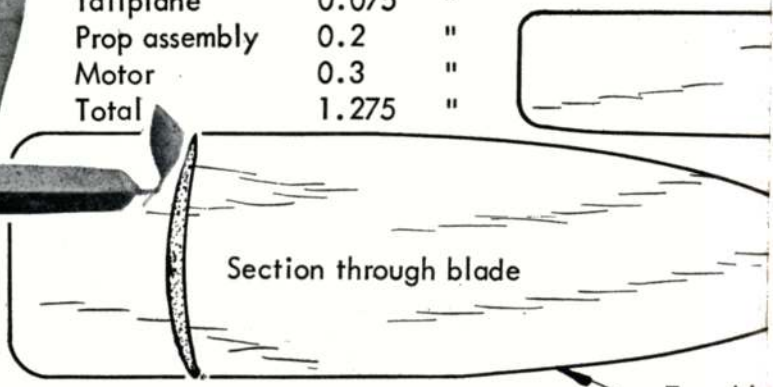

Le petit KNIGHT

by W.J. Trotter

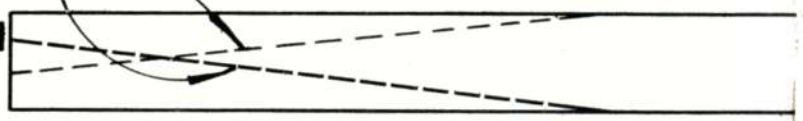

Side profile of 1/2" sheet prop blank

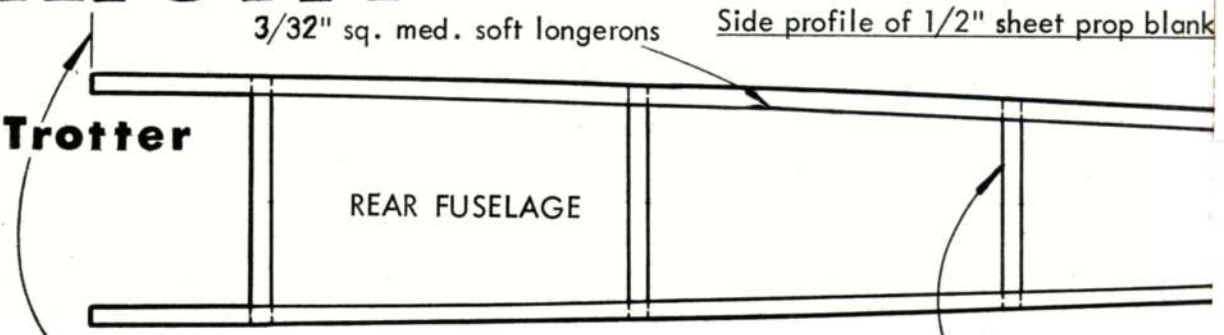

Full size plan

25″ span rubber model designed especially for small field flying and the novice

by W. J. TROTTER

LE PETIT KNIGHT

HERE IS A CONTEST model in miniature. Something simple enough for the novice, yet involving sufficient structural effort to teach one the elementary arts of construction and cover. In performance it is an ideal tutor for the art of trimming, and for fun, you will have to go a long way to find something with more rewarding flying at this diminutive 25-in. wing span.

There was a time when this size of model was extraordinarily popular among clubs, who gathered in the smaller flying fields on Sunday afternoons. From our recent readers' survey, it is evident that a very high proportion of aeromodellers in Britain are lone hands, operating under these conditions and it is to them that we particularly recommend *Le Petit Knight* as a project for 1963.

Clubs might find it ideal as a "one-model" contest subject, setting everybody off at the same basic start, although in fact, we do not claim this tiddler to be in any competition class. It was scaled down by the designer from our now world famous Coupe d'Hiver specification design, *Garter Knight* by Derl Morley. A whole series of models have been built, some of them down to 20-in. span and long flights have been obtained.

Why not build one for yourself?

Cut out $\frac{1}{16}$-in. sheet front fuselage sides, then make up rear $\frac{3}{32}$ sq. sides and cement each to the front portion. Use only soft balsa for the rear end of the fuselage. Now fit the top and bottom $\frac{1}{16}$-in. sheets, which are cut to the dotted inner line profile on side view. Only cement the pylon on when the whole model is finished and the glide tests are made. It can be temporarily fixed with pins while trimming. The fin speaks for itself, being a simple flat plate made of $\frac{1}{16}$th. square. The tailplane is built of lightest grade balsa and sanded down finally to give a good airfoil section.

Start the wing by cutting out all ribs (noting the slight undercamber) and cement these to the trailing edge and leading edge, which are pinned over the plan. They are slightly slotted into the trailing edge. Gussets are added to keep the wing firm. Make the wing in three separate panels and then join them. Each tip is given 2-in. dihedral. Sand well down and try to keep weight low.

The propeller assembly is simple, but the blade may be tricky for some. If you cannot make it, try and persuade someone who has made one before to personally demonstrate how. This lost art of propeller carving needs revival. If really desperate, buy a plastic prop!

Cover with a lightweight tissue and after water shrinking, apply two coats of thinned (50 per cent. dope, 50 per cent. thinners) dope to wings, tail, fin and rear fuselage and two normal strength coats of dope on the sheeted area of the fuselage. If you have built the model exactly to plan you should now have a successful beginners model, capable of quite high performance.

About flight trim: Test glide the model over long grass and get as flat a glide as possible by putting packing under the tail leading edge if the model stalls, and under the trailing edge if it dives. When flight testing, choose a calm day, and use 50 turns to get the climb trim right. Keep adding extra stages of 25 turns until the total reaches 400 and be careful when launching. The prototype would even do V.T.O.'s (vertical take-off) with full turns; but this needs care. Launch gently into wind at all times. Before each flying session, lubricate the motor, and always check the prop shaft for bends and alignment.

Le Petit Knight is light enough to bounce away from a hard knock without serious damage and will survive many a day's flying in the smallest fields.

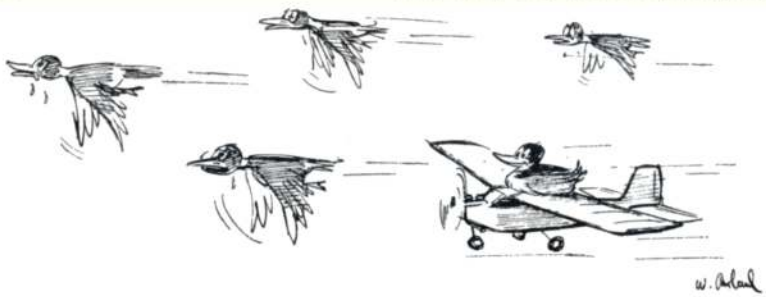

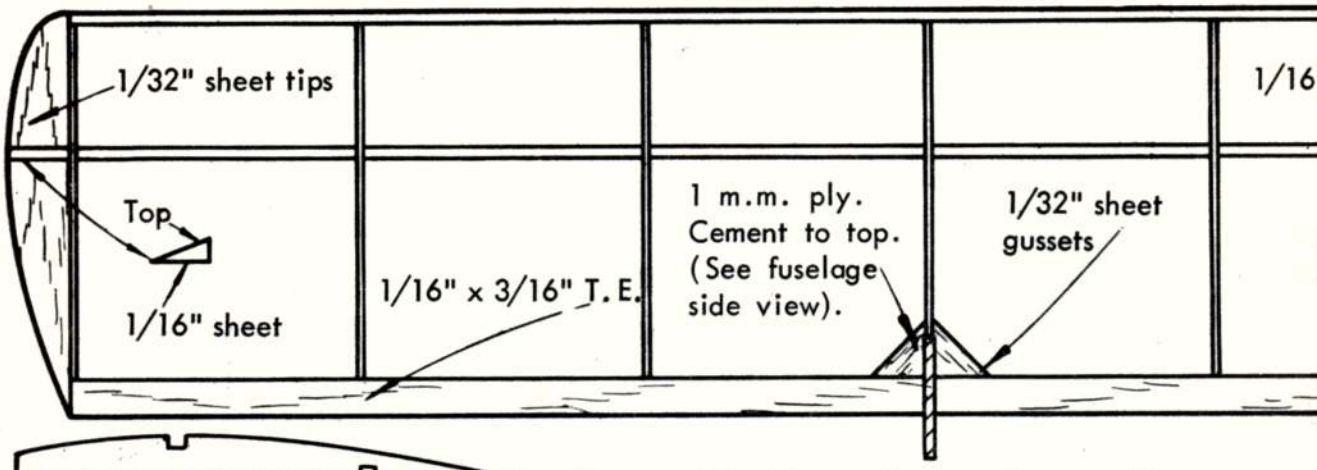

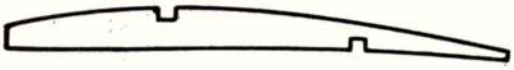

Wing rib. 17 off. 1/32" sheet

Cover model with superfine jap tissue. Give one coat
Power with 6 strands 1/4" flat "Pirelli" or 6 strands 3/1
9.5 gr. weight when lubricated. Max. turns 400.

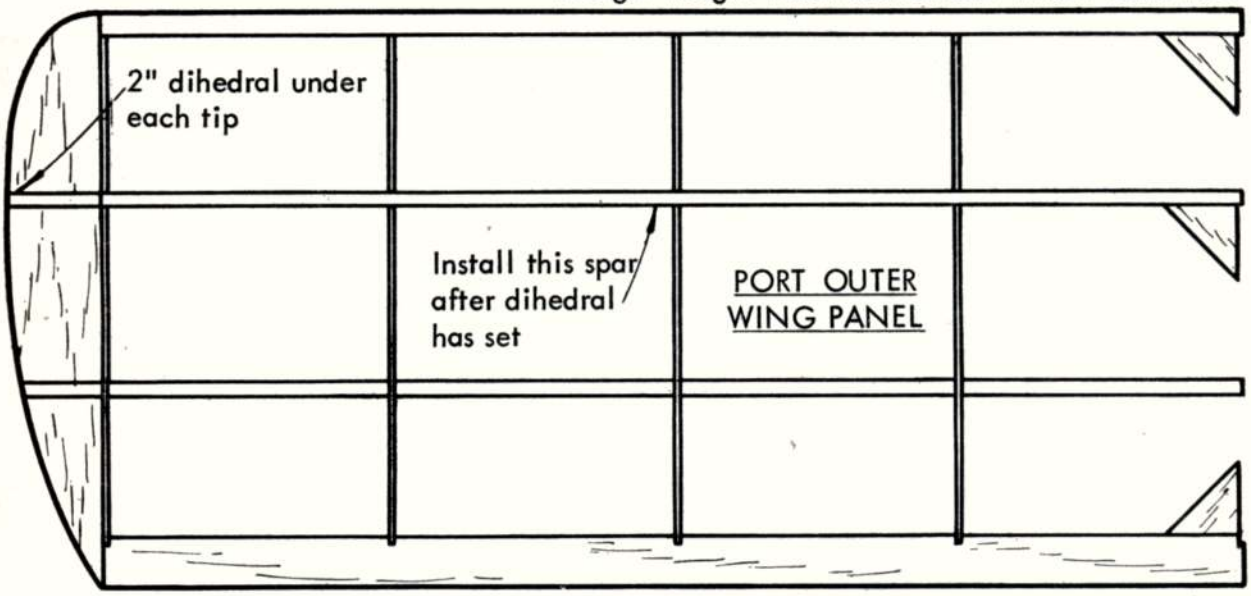

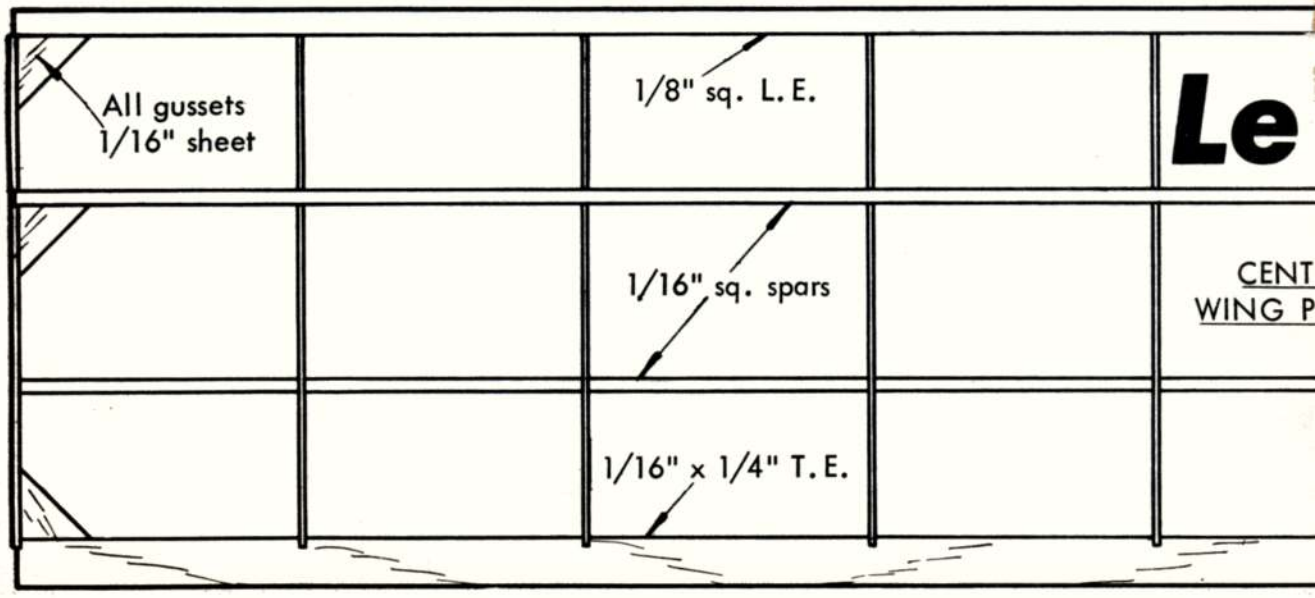

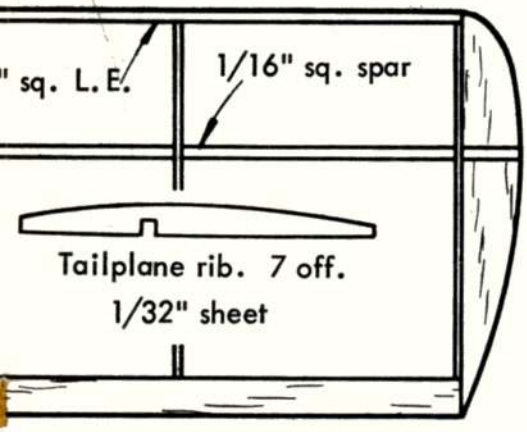

of dope (25% dope. 75% thinners).
6" flat "Dunlop". Approx length 10".

Materials Required

3 strips	of	1/16" x 1/16" x 36"	Med.	hard	balsa
2 "	"	3/32" x 3/32" x 36"	"	soft	"
1 "	"	1/8" x 1/8" x 36"	"	hard	"
1 "	"	1/4" x 1/16" x 36"	"	"	"
1 "	"	3/16" x 1/16" x 36"	"	"	"
1 sheet	"	1/32" x 3" x 18"	"	"	"
1 "	"	1/16" x 3" x 36"	Soft		"
1 piece	"	1/2" x 1 1/4" x 5"	Med.		"
Scrap	"	1/8" sheet			
Scrap	"	1 m.m. ply			
1 piece	"	18 s.w.g. wire			
1/16" dia. dowel. 3" long					
1/8" dia. alloy tubing. 2" long					

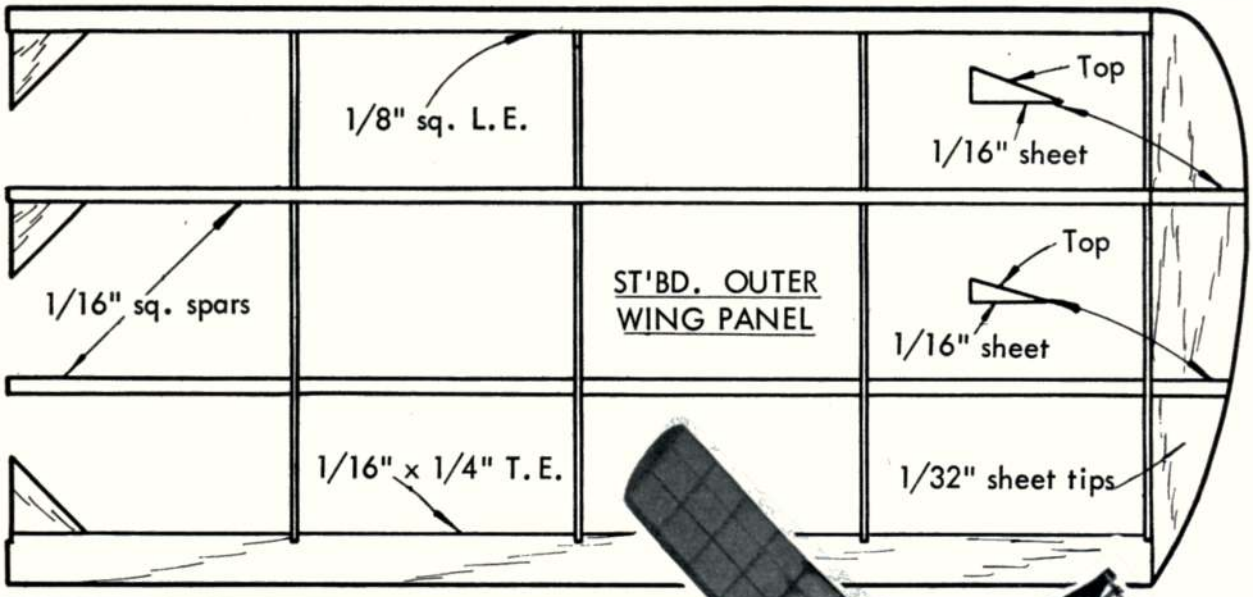

petit KNIGHT

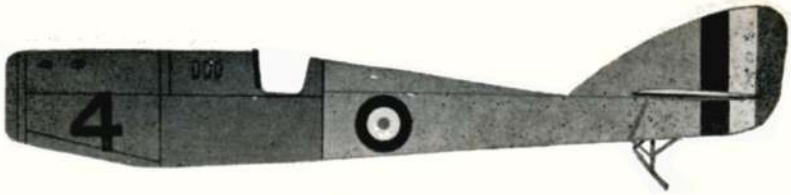

R.F.C. SQUADRON MARKINGS PART FIFTEEN

Described by
Leslie A. Rogers
Drawn to 1/72nd scale
by K. McDonough

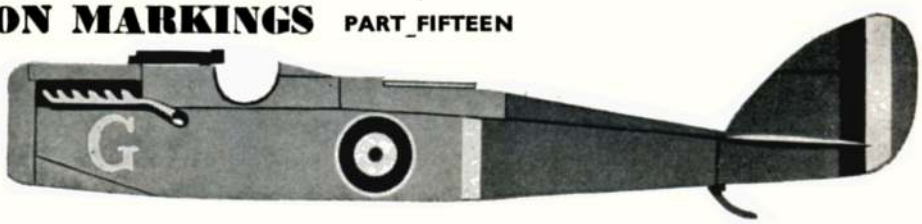

Martinsyde G.100/102 at top displays individual No. 4 Aircraft "G" represents the style of marking on A and B Flights as seen in February 1917 at Serny in the Pas de Calais area. Aircraft "O" represents the C Flight style and upper wing marking is typical of all their D.H.4's

27 *Squadron R.F.C.* went to France on March 1st, 1916, equipped with Martinsyde G.100. Later they were established with the more powerful G.102, known as the *Elephant*. In November, 1917, the Elephants were replaced by D.H.4's, which were in turn superceded later in 1918 by the D.H.9.

The Martinsyde Elephants carried a numeral on the side of the engine cowling which was painted black on the light coloured earlier aircraft and white on the khaki-green colouring of later types. Exact sequence of numerals unknown but certainly included "4" and "6".

Using D.H.4's the **Squadron Marking** (carried from November, 1917 to March, 1918) was one vertical white bar painted on the fuselage side behind the cockade.

Flight and Individual Markings.

"*A*" *Flight*—used the group of letters A, B, C, D, E, F painted on the nose below the manifolds. This was repeated on the upper wing on either side of the centre section. These letters were all white, but shaded with black. The letters were again repeated under the lower wing, both port and starboard, these letters were black. Wheel discs were painted white.

"*B*" *Flight*—used G, H, J, K, L, M in the same positions as for "A" Flight on fuselage and wings. Their wheel discs were painted red with narrow white edging.

"*C*" *Flight*—used the letters N, O, P, Q, R, S painted in white behind the Squadron Marking, but in the same wing positions as "A" and B"""" Flights. Wheel disc colours are not known.

It is noticeable how the style of lettering varied from aircraft to aircraft.

There are no details of the markings on D.H.9's.

It is interesting to note that the early association with the Martinsyde Elephant led to adoption of a Green Elephant insignia and mascot for post-war use, and in the approved Squadron crest. Currently equipped with the Vulcan B.2, 27 Squadron is based at R.A.F. Scampton The Squadron Leader's aircraft was featured in our issue of October, 1962.

27 Squadron "A" Flight at Serny, Pas de Calais in February 1917, Imperial War Museum Photo No. Q 12015. Note that only aircraft "A" has unpainted cowling

Handing up photographic plate to the D.H.4 Observer in aircraft "O" of C Flight, 27 Squadron R.F.C. at Serny. Imperial War Museum Photo No. Q.11980. Note the pilot well down, apparently prepared for flight without engine cowlings

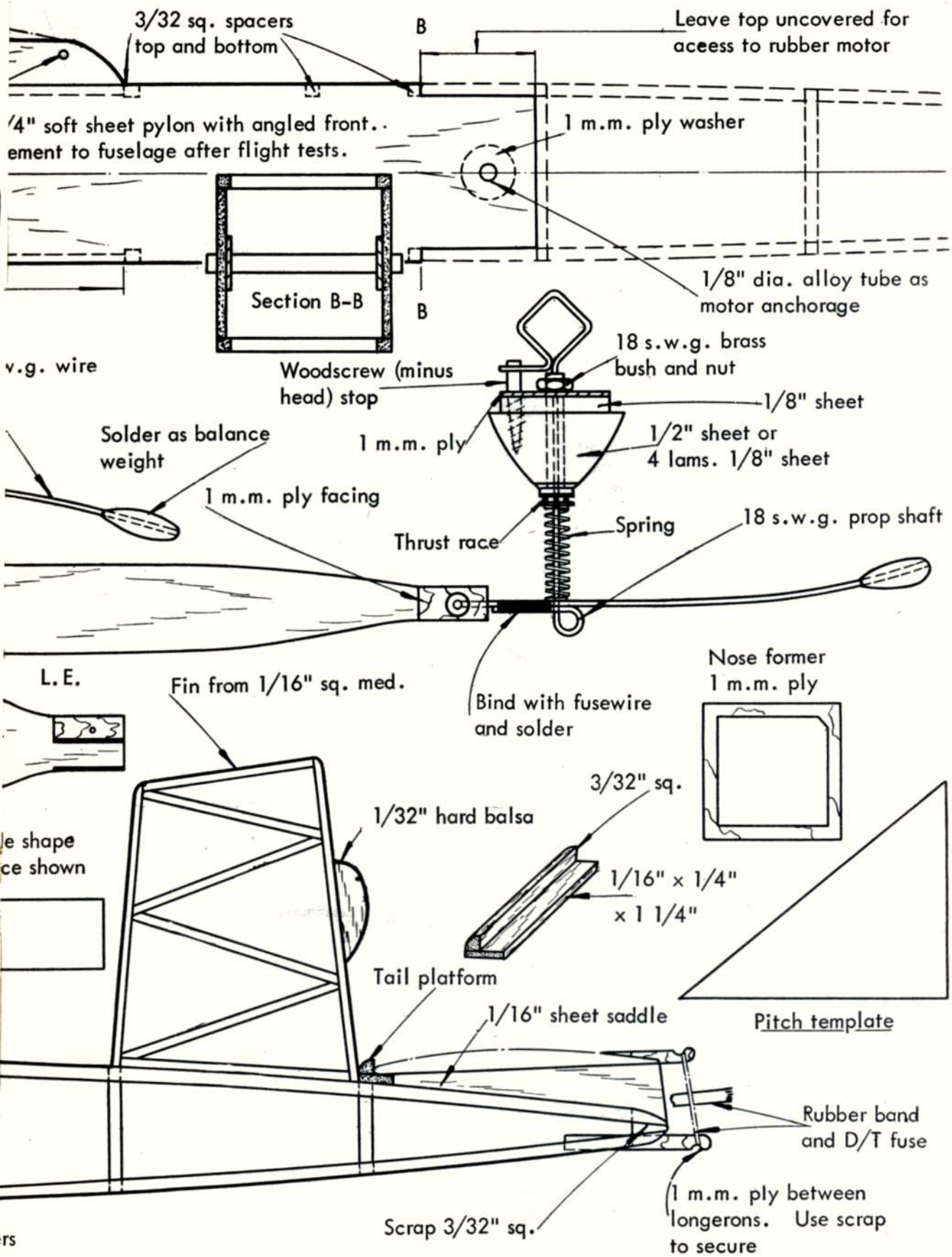
3/32 sq. spacers top and bottom
B
Leave top uncovered for access to rubber motor
/4" soft sheet pylon with angled front.. ement to fuselage after flight tests.
1 m.m. ply washer
Section B-B
B
1/8" dia. alloy tube as motor anchorage
v.g. wire
Woodscrew (minus head) stop
18 s.w.g. brass bush and nut
1/8" sheet
Solder as balance weight
1 m.m. ply
1/2" sheet or 4 lams. 1/8" sheet
1 m.m. ply facing
Thrust race
Spring
18 s.w.g. prop shaft
L. E.
Fin from 1/16" sq. med.
Bind with fusewire and solder
Nose former 1 m.m. ply
3/32" sq.
1/32" hard balsa
le shape ce shown
1/16" x 1/4" x 1 1/4"
Tail platform
1/16" sheet saddle
Pitch template
Rubber band and D/T fuse
1 m.m. ply between longerons. Use scrap to secure
Scrap 3/32" sq.
rs

OVER the WAVES

THE IMPACT OF multi-channel flying scale models at the 1962 U.S. Nationals seems likely to be repeated at the British Championships this Whitsun. In Bromley there seems to be a hive of activity, one product of which is seen in our heading photograph. This is Bill Lowe's 72-in. near scale *Dornier* 335 with 10-channel control. Independent throttles are employed on the Super Tigre 56 up front and K. & B. 45 pusher at the rear. With four channels on these throttles, no rudder control is used, but from first flights on February 24th, control has been very successful, sufficient to influence Dave Walker to follow suit with a pure scale version, not employing extra wing area and fitted with the same engines, but having linked throttles and rudder control. The *Do.* 335 push-pull twin layout eliminates the usual torque snags of twins, flies on either engine and will probably start a rush for plans of similar types, *e.g.*, *Fokker D.23*. Incidentally, Dave Walker has now repaired his *Miles Monitor* twin, equipped with Fox 35's this time, the Merco's provided a little too much torque.

He also has a *Heinkel* 219 on the way. His *Boeing B17F Fortress* was not exactly "Fort"unate on its first outing, climbed up like an open power job after a beautiful take-off with all four K. & B. 19's roaring, then Dave hit down trim instead of full down elevator to check the climb, the result was a stall and a slightly bent fuselage, etc. The khaki painted airframe is repairable.

Still on the scale theme, Bill Lowe has an 84-in. *IL-2 Stormovik* two seat dive bomber on the way for awaited 12-channel Orbit and McCoy 60. This promises to be quite an eye-opener as Bill has a simple but effective retracting undercarriage, fully bench tested for this model, using pulley and nylon fish line drive from a slipping clutch Mighty Midget servo. As a stablemate, it will have Dennis Bryant's *Macchi* 202, this 6½ lb. scale version of the elegant Italian fighter will use F. & M. 10-channel gear and K. & B. 45. When that little lot is operating at Biggin Hill, it's small wonder that the local Royal Observers Corps group don't run berserk.

When **Radio and Electronic Products** introduced their "*Twin Triple*" for 2-channel operation of independent escapements in the same model, it seemed logical that the same principle could eventually be employed to divide the controls and so fly two independent models simultaneously. This was, in fact, George Redlich's conception several years ago, but there were innumerable snags and at long last production and design difficulties have been thoroughly overcome with the introduction of the "*Gemini*" twins. To retail at about £18 18s., the all-transistor transmitters will be matched to tone filter receivers. The red anodized outfit will operate on high tone of about 3,000 cycles and the green set on low tone at 750-800. Paired sets will be factory matched and receiver cases encased in sealed plastic, leaving only access to aerial tuning. Crystal controlled and with push-pull Tx output, using centre loaded aerial, the 9-volt transmitters will be very powerful. Constructionally, it introduces several new techniques. One is a specially designed and mounted button shield to prevent the Micro switch (which has a very nice action) from being accidentally keyed. When the switch is depressed, it switches carrier and tone, whilst to have carrier on permanently, one operates an independent slide switch on the top of the Tx. Receivers will be available in two versions, relayless for linking to escapements; and with relay for back contact operation and to trigger independent motor driven servo circuits. The relayless Rx weighs 1¼ ozs., uses 4.5 volts. Chris Olsen has air tested the twins in *Veron Orbit* models (strange how Chris has even made the Orbit look like a miniature *Uproar*!).

Stern reminder to U.S. modellers has appeared in the A.M.A. "*Model Aviation*" that unless proper action is taken to obtain the F.C.C. Citizens' Radio License, for operation of model radio control, there is a strong likelihood that by 1966, modellers will be squeezed off their allocated spot frequencies. The writing is on the wall and applies equally to British modellers. Unless modellers protect their own interest by conforming to legal requirements, it is obvious that band allocation could easily be changed in favour of more numerically demanding radio services—are YOU licensed?

Top, Snowbound Biggin Hill attacked by invading Do 335 (model version by Bill Lowe—see text). Left, H. de Bolt's new "Interceptor", 68-in. multi-stunt with 748 in. sq. wing, using N.A.C.A. 65018 to 65012 laminar sections. Has full span ailerons and elevator, weighs 6 lb. 2 ozs. with Merco .49 for Space Control. Main feature is that Retract-Gear, wheel brake and spin operations are by pre-programming

Contest Designs

US TEAM 1963 A/2
WEST COAST WINNER
BY N. P. INGERSOLL

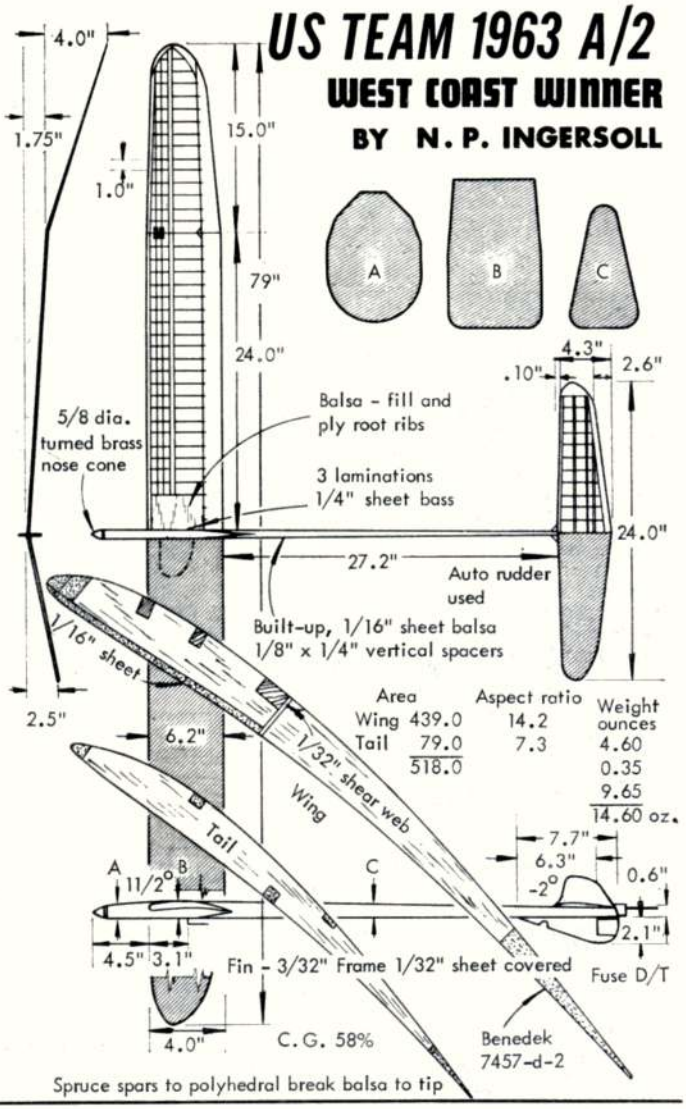

NORMAN INGERSOLL from North Ogden, Utah, has incorporated many practical design features in his design which will be seen in action at the 1963 World Championships during August at Vienna. The model was created to cope with 0 to 20 m.p.h. wind conditions, combining clean lines with flexibility and strength and yet removing weight from the extremities. Thus, Spruce spars are employed with vertical sheer webbing and outer wing tips are tapered to save weight. The tailplane has 2½-in. dihedral to keep the tips free of ground obstruction. Benedek 7457-d-2 airfoil section is employed with a sharpish leading edge and surface mounted spars to obtain a turbulator effect. Note that the wing undersurface is sheeted partially for strength and also to smooth the airflow entry at this critical section of the airfoil. We reprint this drawing from "*Scatter*" newsletter of the Southern California Aero Team, where comment is made that the model follows very well on tow and requires some velocity on release, so that it should lead into its natural turn.

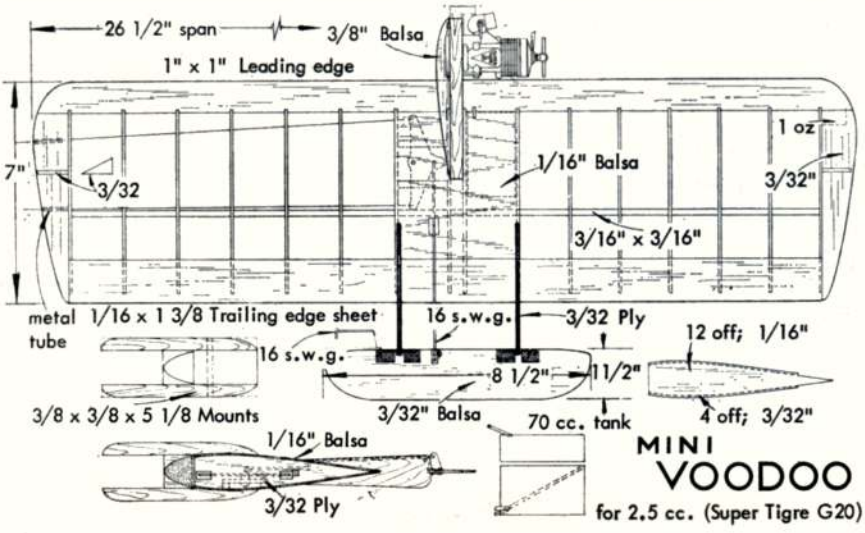

The American combat class, which is for engines up to .36 cu. in., has not been universally adopted outside the U.S.A. However, there is considerable design influence and this *Mini Voodoo*, taken from the Finnish magazine *Ilmailu*, shows how one of the most popular U.S. combat flying wings is suitable for reduction to suit the 2.5 c.c. F.A.I. size motor. Large cross-section leading edge supported by a single rear spar and broad trailing edge sheet, give more than adequate strength. No detail is given of the advised C.G. position, but it should be about 1½-in. back, from the leading edge.

Repairing with GLASS FIBRE

by K. Lindsey

IN A PREVIOUS article, the production and finishing of models using glass-reinforced plastics was discussed in some detail.

Glass Fibre also offers considerable scope as a repair medium. The model to be repaired need not be itself based on glass fibre. We took a supply of glass fibre to the Northern Heights Gala last year and managed to renovate two nearly destroyed combat models in double

FIG. 1

quick time. At the High Wycombe rally the word had got around and seven more combat sufferers received the treatment. At the Nationals the eventual winning 5 c.c. speed model acquired an abnormal amount of dihedral during its first flight. The fuselage and wing were cracked right through. After a glass fibre repair, the model went on to make the two fastest 5 c.c. flights of 1962 and its still going strong. Similarly at the World C/L Championships in Kiev, when Pete Drewell's Monoline model crashed, a repair with glass fibre was carried out overnight. The model went on to become the top British performer and has since won a number of contests in England, including the fastest recorded 1962 2.5 c.c. flight.

Unlike the traditional repair with pins and balsa cement, a glass fibre repair is likely to be as strong, or stronger than the original. The repair time depends on the atmospheric temperature and on the percentage of

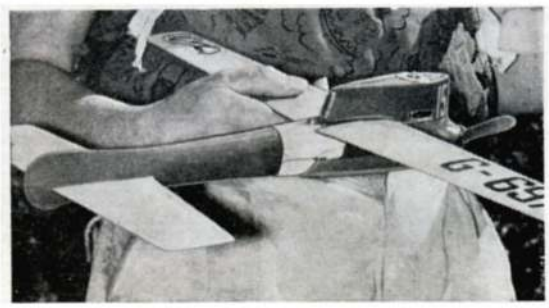

catalyst used in the resin. In sunny warm weather, as at High Wycombe, using 15 per cent. catalyst models were ready to fly 15 minutes after repairing. The fastest repair possible is probably about 10 minutes with, say 20 per cent. catalyst. It is safer to stick to a maximum of 15 per cent. though, in case you manage to get areas of neat catalyst in the resin. Also a 15 minutes repair means the working time for the resin is restricted to about five minutes. With 20 per cent. catalyst, the mixture may set before the repair is completed.

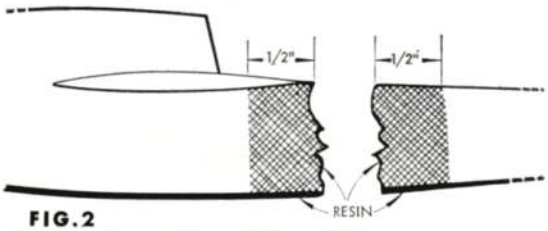

FIG. 2

Full repair procedure will be as follows:—

1. Wipe as much fuel, mud, etc., off the break as possible.
2. Cut away any loose pieces of wood, tissue, etc., the glass fibre will actually replace these.
3. Roughen up the nearby wood as much as possible with a modelling knife, or coarse sandpaper.
4. Cut the necessary pieces of glass cloth to size (preferably on the large side).
5. Pour the required amount of resin into a suitable container (a tin lid or empty dope can). Mix in 15 per cent. catalyst, making sure that the mixing is as thorough as possible, by spending just about a minute stirring. A brush is the best mixer, but in an emergency, almost anything will do.
6. Brush a coat of resin-catalyst on the broken area; lay the cloth on; apply another coat of resin working the resin into the cloth with a jabbing action on the brush.

Above, is the result of hitting the ground at over 130 m.p.h.! At left, less than 24 hours later, with Glass fibre reinforced repair, the model turns in best British speed at the 1962 World Championships. Joint is stronger than the original

7. Leave the whole lot absolutely alone for 10 minutes. Don't try to smooth out any wrinkles in the cloth and/or resin after the first five minutes.
8. Give the joint a wipe down with acetone (preferably) to remove the thin sticky layer left on the resin surface. In the absence of acetone, thinners or even fuel (diesel) will have the right sort of effect.
9. Re-commence flying.

Just to help you understand this, let us consider two typical types of breaks. (*a*) the sort suffered by Peter Drewell's model at Kiev (*Fig.* 1). Here it is not necessary to cut away any wood. Just wipe the area dry and roughen up the surfaces on either side of the break. Now cut out an inch wide band of .010-in. cloth of the required length (fuselage circumference). (*Fig.* 2). Apply resin-catalyst to the inside of the break and the roughed-up sides. Hold the two halves together—apply glass cloth and another coat of resin. Finish off as in general procedure. (*b*) In the case of a combat wing broken off at or near fuselage. (*Fig.* 3). As before, clean and roughen up the area. Remove all loose bits of wood and covering. Cut four pieces of cloth (all the same size) to extend over the fuselage wing area to an inch on each side of the fuselage and overlapping the leading edge and trailing edge slightly. Plaster the whole area with resin-catalyst and apply two layers of cloth top and bottom

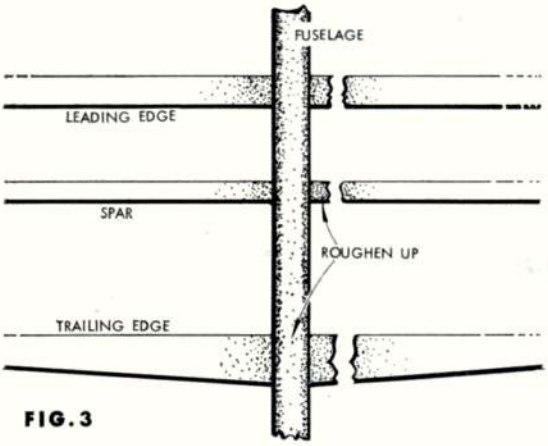

FIG. 3

(*Fig.* 4). That is, a coat of resin, layer of cloth, coat of resin, layer of cloth, final coat of resin. Finish as before. Make sure, by the way, that you have pushed the wood firmly together, don't leave it as in *Fig.* 4, where the break is emphasised. The next time the model hits, it should not break at this point!

Generally, the standard .010-in. *Bondaglass* cloth is the most useful, though when weight of joint is important to the trimming of the model, thinner cloth can be used. The thinnest obtainable in this country is about .005-in., but we use some .002-in. for delicate repairs and model construction. This looks like fine silk and is specially obtained from U.S.A. *Don't* use the Bondaglass ½-thou. surface mat for repairs—it has little physical strength and is horrid to work within these applications.

Glass fibre sticks tenaciously to balsa, very well to hardwoods and poorly to metals unless the metal is drastically roughened up. In emergencies though, it can

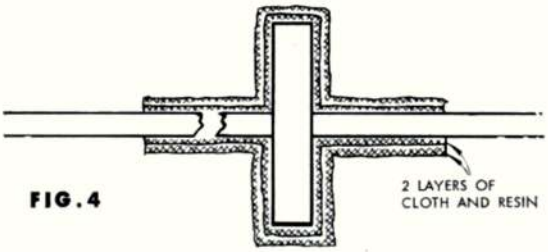

FIG. 4

be used in seemingly impossible applications. A split or leaking fuel tank can be effectively cured by roughening the outside (after getting rid of all fuel) and covering the whole tank with cloth and resin. An undercarriage which has come adrift, can be fixed back in place easily. Broken engine bearers can be effectively repaired with a covering of cloth and resin, no matter how hard the break. A broken-off bearer could even be replaced with a solid glass fibre block. Tailplanes, elevators, wingtips, etc., are easy to fix, but if you happen to break a con-rod or crankshaft, don't think that G.F. will do the trick.

Don't try to make it set faster by putting it near any sort of naked flame—the resin is highly inflammable.

Surfaces generally have to be roughened up as the paintwork may not stick too well to the resin. Acetate-base colour dopes don't take too kindly, from an adhesive point of view, to resin, but the resin is satisfactory on Britfix colour dope and enamel and most clear dopes. Coloured tissue, silk, nylon, etc., present no difficulty. Ready-to-fly plastic models are not repairable with glass fibre.

These repair techniques can of course, be used to considerable advantage to strengthen vital areas of models under construction.

Cost—a really complete kit able to do at least half a dozen major combat repairs on the flying field, would consist of:—

3 x 1 ft. of .010-in. c'oth	3s. 0d.
10 oz. *Bondaglass* resin — large bottle catalyst (2s. 6d. size)	9s. 6d.
Brush	6d.
Small bottle Acetone	6d.
Total ...	13s. 6d.

That is, about 2s. per major repair. It would take some individuals quite a while to get through this amount on just repairs, but a club's effort to write off models at a couple of rallies would probably use up this much—Happy smashing!

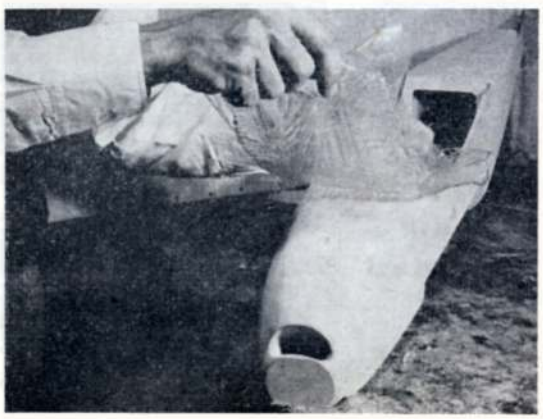

Pat Wheeler uses Glass Fibre to strengthen a model so anticipating the accident. This reinforcement of an Astro Hog was detailed in AEROMODELLER, May 1959. Cloth layer is superimposed over normal planked structure, the result is tremendously strong

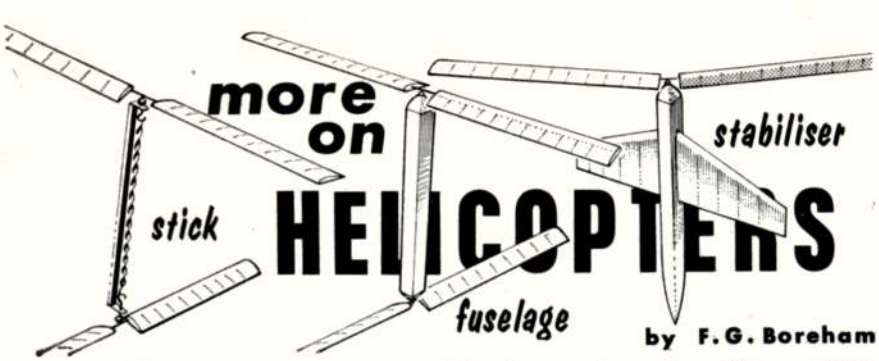

more on HELICOPTERS

by F. G. Boreham

WITH MOST HELICOPTER models, the question of stability is of prime importance and often difficult to achieve. The following will help the helicopter modeller.

Relating to the rubber driven model, the accepted types are shown above, the simplest form having a stick fuselage with a thrust bearing bound at each end. Rotors top and bottom are connected to the same motor.

The rotors revolve in opposite directions, eliminating torque and must be of opposite pitch. Of course, the power run is limited as the motor winds out its energy at double the speed.

Simple construction and light weight make a successful flyer, which is usually stable enough in calm or undisturbed air, but when enlarged and fitted with fuselage lengthened to increase duration, then the stability disappears and performance is disappointing.

A vertical climb may not be obtained, the model tipping to one side or the other, even turn over and dive to the ground or in some cases limited horizontal flights result. This behaviour is due to the fact, that, the thrust force of a propeller or rotor in yaw is inclined in such a direction as to further increase the angle with the wind. A fixed fin or small plane which can be adjusted so the best position for stability can be found in order that the air forces on these areas have a corrective effect on any displacement, see *Fig.* 2. The Centre of Gravity is also

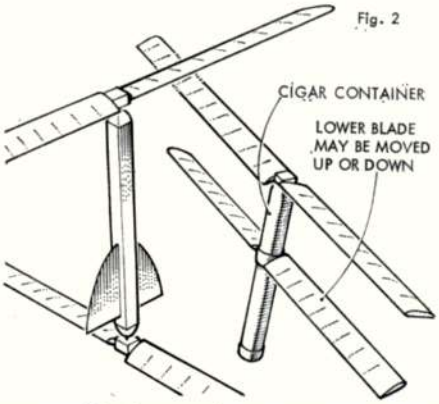

Fig. 2

important and for best results the rotor or rotors should be located on the C.G.

This is demonstrated most effectively by the simple model shown in *Fig.* 3. The position of lower rotor changes the flight pattern. It will be found that a model

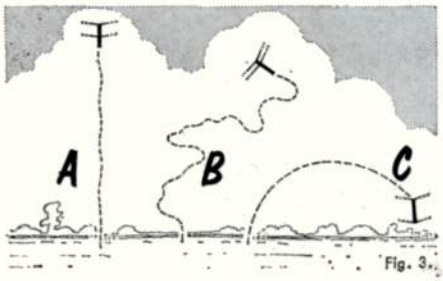

Fig. 3.

with one rotor on top and the other about ¼ to ⅓ down the fuselage, will be reasonably stable, while the addition of small weights using Plasticene or sealing wax at the blade tips will help. The use of fixed fins rotating with the fuselage have an important effect on the stability and in this connection arising from the article by M. Andre Watteyne in the AEROMODELLER ANNUAL, 1961-2, some experiments have been made with success.

The Watteyne stabilising device consists of two parallel fins which are mounted rigidly on the fuselage and turn with it *Fig.* 4. The stability is enhanced when the speed of rotation is higher, also the distance apart improves matters. I have found quarter the rotor diameter best.

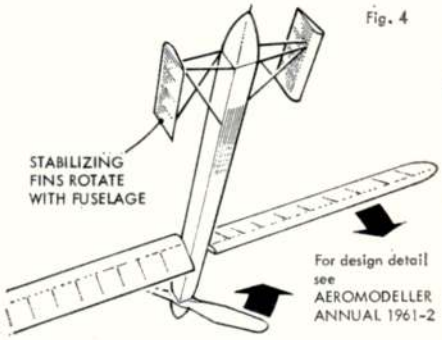

Fig. 4

A simple rubber driven model showed the benefit of the device and it was, therefore, decided to try the fitting of these fins on a power driven reaction type.

Vertical fins made of thin sheet aluminium, having an aspect ratio of approximately 3-1, were fitted to "Daddy Longlegs", *Fig.* 5. Best results were obtained with the fins fitted on wire stays independent of the blades, as the extra drag when bolted to the blades, due to the blade feathering motion lowered the rotor R.P.M., to the extent that the model had only marginal lift and could barely maintain height. However, the steadiness in flight was remarkable, and the hovering was improved as the stabilisers minimised the tendency to wander.

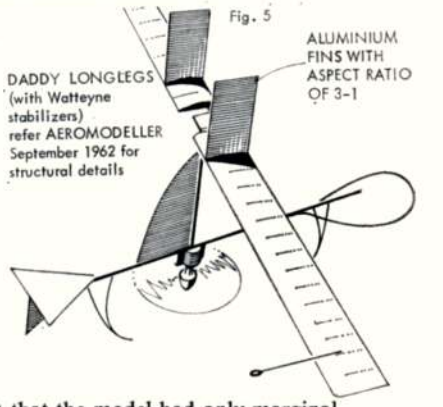

Fig. 5

The fins were also fitted to a reaction 'copter with the engine unit mounted on top of the hub and with the gimbal-mounted or see-saw propeller removed, flights were made without this aid to stability quite satisfactorily. *Fig.* 6. It is most important, however, for the rotor speed to be as high as possible for the fins to work well. In this connection I have always found that it is necessary to check the balance of the rotor system carefully as vibration and out of balance quickly lowers the r.p.m.

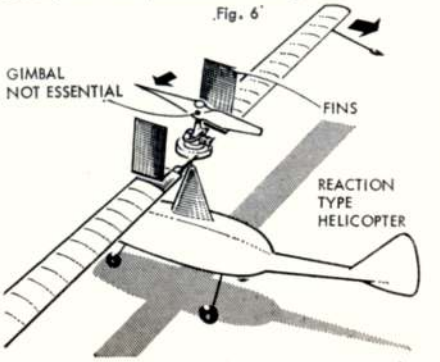

Fig. 6

Reader's Letters

The Editor does not hold himself responsible for the views expressed by correspondents. The names and addresses of the writers, not necessarily for publication, must in all cases accompany letters.

Breguet XIX

DEAR SIR,

May I add further comment to the description of the Breguet XIX published in your Famous Biplanes Series, February issue.

Captain Orliciski flew from Warsaw to Tokyo in 1926 using a Breguet XIX B-2 with Lorraine-Dietrich 450 h.p. engine, which was at that time the equipment of the Polish Air Force. The flight was made in 25 days. More remarkable was the return. The aircraft was severely damaged whilst on the ground at Byoka, U.S.S.R. It was carried away by a whirlwind; the lower wing snapped off at the inter-plane strut on one side, the airscrew cracked and the engine mounting damaged. Without spares, Captain Orliciski undertook repairs with ordinary joiner's glue, and wire binding on the airscrew. To balance the lift, he removed the fabric from the tip of the opposite lower wing and then flew back safely to Warsaw.

It should be noted that a Frenchman, Pelletier d'Orsy also attempted a Paris to Tokyo flight earlier than Captain Orliciski, but his attempt terminated at Mukden and M. Pelletier returned to Paris by train.

Z. HEINEMAN.

Wroctaw 28, Poland

Many remarkable long distance flights were made by this design. It has always surprised us that so little is known of the Breguet XIX outside the Continent of Europe. Our feature was centred on the more famous "Question Mark" and space restrictions prevented us from listing innumerable other achievements. Incidentally, we thank those readers who have noted their satisfaction that we should have included this aeroplane in our "Famous Biplanes" Series and take pleasure in the fact that many of our readers have recognised that George Cox's drawing is the first ever to be published of this famous aeroplane.

Czech engine

DEAR SIR,

In your report of the M.V.V.S.-1D engine, you state that it is the product of a government institute. This is not so.

The letters MVVS are the initials of the words which translated mean Model Research Institute, and the Principal, Zdenek Husika told me that when started, it was financed by the Czech Aero Club, but now they have to live on what they earn. They sell mostly the engines and wooden airscrews. They do a little radio equipment, but not much. R.F. transistors are expensive, the O.C. 170 costs £5, and there is no Czech equivalent. All their radio research has to be paid for out of what they make on engines etc.

I am glad the engine has turned out so well. It was not selected in any way, just taken on the spur of the moment from a cupboard in which the first 100 were lined up on a shelf. (The first 100 production engines).

HOWARD BOYS.

Rugby.

Thanks to Howard Boys for this revealing statement on the Czechoslovakian Institute. General impression is that these establishments in the U.S.S.R., Hungary and Czechoslovakia have unlimited facilities and produce truly professional products with great advantage over Western "amateurs". Our personal experience is that this is not so. Admittedly, Institute personnel gain invaluable experience which has enabled them to carry off Championships, but as far as engine design is concerned, their equipment is not comparable to that employed by the majority of commercial manufacturers. All credit to them for the high standard of product such as the MVVS—1D, as reviewed in March issue. Incidentally Howard Boys loaned this engine for our appraisal. He "collected" it on one of his many remarkable jaunts abroad by ancient and economic motorcycle.

Fuses

DEAR SIR,

I feel that the time is right to draw your attention to the danger of using dethermaliser fuse which will drop from the 'plane after burning the release band. I am fully aware that many people, like myself, cannot afford a clockwork dethermaliser system, but there are various gadgets in the AEROMODELLER Plans Handbook for keeping the fuse on the model, and I strongly urge the application of these simple ideas. The forecasters promise a hot dry summer when grass and woodlands will be tinder dry. My uncle, who is a farmer, expresses grave concern about the danger to his grassland, and I am inclined to share his sentiments. Remember—you could save an acre of grassland for two pins.

P. GALILEE.

Bradford, West Yorkshire.

Words of good advice indeed! Many of AEROMODELLER Plans include details of snuffer tubes etc., which will prevent fuses from leaving the model. The simplest method is to put a pin through the fuse to keep it attached to the airframe, but to maintain an air gap or else have some asbestos insulator between the fuse and the model for obvious safety reasons.

Single channel R/C

DEAR SIR,

The need for another type of radio contest in addition to the open multi events has long been recognised, but single channel or rudder only competitions have so far not been very popular. It has now been suggested that a competition for single push button controlled models might be successful.

There are two reasons for the lack of support for rudder only contests. Firstly, once a modeller has achieved success with single channel he wants to progress to more channels. Secondly, because of the high cost of the model and the large amount of practice flying necessary to achieve competition standards, the model must serve for pleasure flying as well. While it may be very satisfying to achieve say, perfect loops with rudder alone, it is so much easier with an elevator. Likewise with single push button operation—it is no doubt very clever to do everything with one button, but rather futile, and what is more, it is hardly likely to lead to any real advances in radio control technology.

Surely what is required is a restriction on the model. This could be done most effectively by the introduction of a lightweight multi class. Rules would be to existing multi contests, but the all up weight of the model with radio and batteries, but excluding fuel, would be restricted to say, 2 lbs. (or possibly 1 Kgm for international recognition).

There is a very real need for smaller radio models, and the introduction of lightweight multi contests would do much to stimulate the development of such models and their ancillary radio equipment. There must be many "Galloping Ghost" models at present in existence which would fall into the suggested weight category—there should be no lack of support, even initially, for this type of contest.

What do other enthusiasts think?

DOUG BOLTON.

Nottingham.

True scale

DEAR SIR,

I need some aid. My next R/C aircraft is to be a Supermarine Spitfire. In pictures I have seen of Spits taking off, their landing gear folds one at a time. The right wheel first. Both come back down together. Is this correct, or am I confusing the Spit with some other aircraft? I shall need a Squadron Marking and I thought I would use my initials. As an academic question, was there a JE Squadron and if so what type of aircraft?

JOHN E. TOOMER.

Altadena, California.

You're in luck Mr. Toomer, 610 Squadron operating early Spitfire F1's at Biggin Hill, first carried code letters JE. These were changed later in 1940 to DW. Alternatively, when formed in 1942 with the Typhoon F1b-198 Squadron carried JE code letters. Undercarriage retraction lag was typical of the Spit and many other types with hydraulic operation. Your presumption over the Spitfire undercarriage sequences is absolutely correct. In fact, the port undercarriage retracts over about 80 per cent. of its travel arc, waits for the starboard unit to reach the same position fractionally later, then each leg locks into retracted position. Of course the whole action is fast and a smart pilot could have the wheels up practically as soon as the weight of the aircraft was taken off the tyres during a scramble take-off.

"Launch into a Left Bank"

GADGET REVIEW

AEROMODELLERS ARE ALWAYS loath to throw *anything* away and most model rooms we have had a chance of visiting do tend to look like something the old iron man left behind when he last called. Not that we should be classified as a band of junk collectors—it is simply that the hobby develops a natural inclination for ingenuity and we can often see usefulness in what is to unenlightened eyes, pure scrap.

One of our brethren, obviously so inclined, is S. A. Coyle of London W.12, who has found a wonderful use for old bed springs (sketch **A**). We see a lot of these thrown out in armchairs, cushions or mattresses. Most of them contain some useful piano wire in the form of tapered coil springs, varying from 16 to 10 s.w.g. Find yourself a spring, cut right down one side and low and behold you will have a set of split rings. Now work the spiral out of these, making them flat and with short lengths of hardwood, such as engine bearer material, clipped on to the wire ends you have a set of building clamps of limitless purpose. From one tapered spring one can get five to ten spring clamps of varying sizes and far superior to the traditional clothes peg for pinching fuselage sides.

Many glider enthusiasts use an adjustable towhook. This enables them to cope with varying wind conditions. In very windy weather the hook is moved forward, in calm conditions, it is moved aft.

In sketch **B**, A. Carr of Sheffield shows something which we think ideal for the smaller type of design and which utilises a terminal from a standard 5 amp. 2 pin electricity fitting socket. The towhook is soldered on to the terminal and care must be taken that the hook is soldered on to the same side of the terminal as the bolt. This is then slipped on to a length of piano wire, which must be of sufficient gauge to prevent rock and just passes through the centre hole. As the sketch shows, the bolt can be used to clamp the hook in any position, making a very simple fitting.

Scale modellers often have trouble with strut attachments on Biplanes. F. Adcock of Toton, Nottinghamshire, has been using the idea in sketch **C** for his semi scale model, but it fits many other types where the centre section struts are used as the firm base for the upper wing and the outer wing struts are not of structural value. Lengths of ⅛ in. dia. dowel are glued, with about ⅜ in. projection into the ribs at appropriate positions. A piece of valve rubber tube is pushed over the dowel and the ends of the struts cut with two slots to accept the free length of valve rubber. This means that one cannot have a shaped strut running very close to the wing surface, but if one examines many full-size aircraft you will find that the struts do, in fact, often terminate their broadest form a little way off the wing.

How to mould a cockpit canopy? Common question answered many times in correspondence by us and in our publications, noteably "Flying Scale Models" and the current edition of AEROMODELLER and MODEL MAKER Plans Handbook. Sketch **D** shows how K. Pye of St. Albans uses pegboard for small mouldings and this is a simple variation of the established system. It enables one to quickly attach and detach the acetate sheet from the moulding base, but one has to exercise care with the clearance hole in the pegboard is not interfered in its profile too much by breaking into peg holes. For use, the sheet is pegged into place by 2.B.A. bolts pushed through the acetate. Pins are not needed. The acetate is then heated a few inches away from an electric fire until it is really floppy and giving off steam and then the wooden mould it forced through the pegboard hole, carrying with it the cooling acetate which adopts the shape of the mould.

Three blade propellers are available in limited sizes but there is many a case where one wants to use something of a different diameter or pitch other than can be obtained in the model shop. Scale enthusiast, Stan Perry of Cheltenham, had a 10 in. by 6 in., 3 blade nylon prop on his *Hawker Henley* at the Nationals last year. He needed nylon props for longer life and to avoid worry about nosing over on take-off, which had been the trouble with previous entries. He also wanted a rather large prop to absorb the power of his Nordic 10 c.c. glow plug engine. To make this airscrew as sketched in **E**, he used three individual blades from Keilkraft nylon 10 in. by 6 in. size. The blades were bolted to the hub and retaining plate using a simple jig to set them at 120 deg. spacing. After sealing all holes while in the jig, the hub assembly was filled with Araldite, which was allowed to cure naturally in three days. After cleaning up the filler, the tapped holes for the spinner were made, blades painted and spinner assembled after fixing the propeller to the engine. As a matter of fact no attempt was made to balance the propeller but it runs very smoothly and certainly flies the *Henley* despite its 5¼ lbs. for 48 in. span.

Another towhook idea, and as it happens from a scale enthusiast, J. Bridgewood of Doncaster, is seen in **F**. This is made from .040 acetate sheet and Mr. Bridgewood claims that it will save an inexperienced glider flyer's model every time the model looks like veering into the ground. The hook will flex in such conditions and allow the tow-line ring to slide off. It also permits drilling for attachment of an auto rudder line which is pulled up when the towing ring is hooked. As for testing, Mr. Bridgewood had his son try the idea on an 18 oz. A/2 and although only cemented into a length of ⅛ by ¼ in. hardwood it withstood the wind strain of last years meeting at the A. V. Roe airfield, Woodford.

Last of our illustrations comes from John Rak over in Chicago and it strikes us as being an excellent suggestion for those who make their models with constant design features, particularly in rib spacing. A length of hardwood about ¼ by 2 in. wide is cut with slots spaced at the desired distance between wing ribs, each cut being to the exact thickness of the ribs. Provided the job is done accurately as shown in **G**, this jig can be used first to locate the ribs at correct spacing over the plan, then, as is John Rak's intent, to be held over the ribs to support them as the spars are pushed through from one end. This makes for very quick assembly, in fact, as no doubt many modellers can clearly visualise, one could use this standard rib spacer jig for all sorts of purposes, including the elimination of any form of wing drawing. It could be used as a marking jig for cutting leading and trailing edge slots, or for making up an egg-box full depth spar. As is the case with all jigs, accuracy is essential in the first place so care should be taken when cutting the jig.

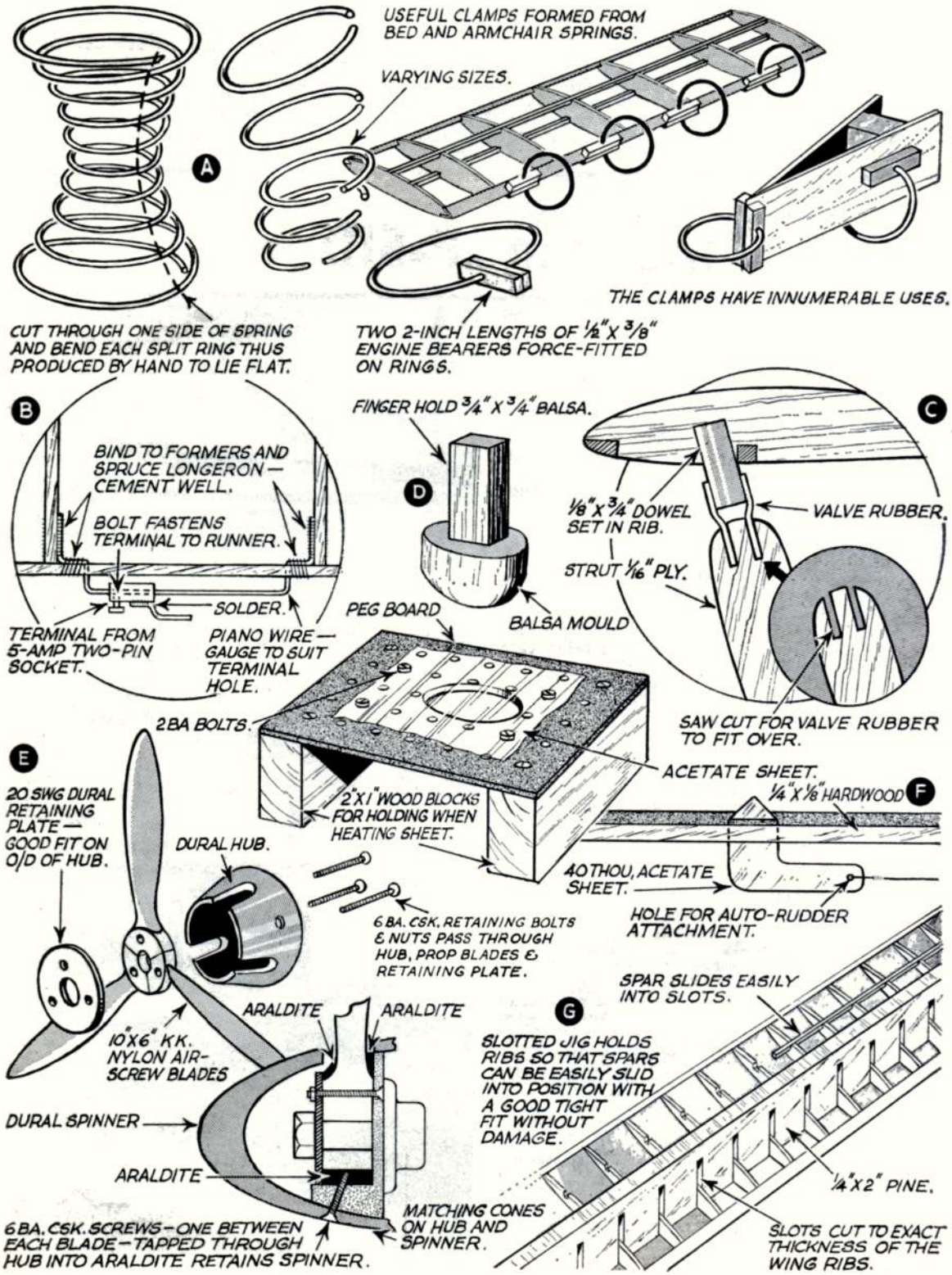
USEFUL CLAMPS FORMED FROM BED AND ARMCHAIR SPRINGS.
VARYING SIZES.
A
THE CLAMPS HAVE INNUMERABLE USES.
CUT THROUGH ONE SIDE OF SPRING AND BEND EACH SPLIT RING THUS PRODUCED BY HAND TO LIE FLAT.
TWO 2-INCH LENGTHS OF 1/2" X 3/8" ENGINE BEARERS FORCE-FITTED ON RINGS.
B
BIND TO FORMERS AND SPRUCE LONGERON — CEMENT WELL.
BOLT FASTENS TERMINAL TO RUNNER.
SOLDER.
TERMINAL FROM 5-AMP TWO-PIN SOCKET.
PIANO WIRE — GAUGE TO SUIT TERMINAL HOLE.
FINGER HOLD 3/4" X 3/4" BALSA.
D
BALSA MOULD
C
1/8" X 3/4" DOWEL SET IN RIB.
VALVE RUBBER.
STRUT 1/16" PLY.
SAW CUT FOR VALVE RUBBER TO FIT OVER.
PEG BOARD
2BA BOLTS.
ACETATE SHEET.
2"X1" WOOD BLOCKS FOR HOLDING WHEN HEATING SHEET.
E
20 SWG DURAL RETAINING PLATE — GOOD FIT ON O/D OF HUB.
DURAL HUB.
6 BA. CSK. RETAINING BOLTS & NUTS PASS THROUGH HUB, PROP BLADES & RETAINING PLATE.
10"X6" KK. NYLON AIR-SCREW BLADES
ARALDITE
ARALDITE
DURAL SPINNER
ARALDITE
6 BA. CSK. SCREWS – ONE BETWEEN EACH BLADE – TAPPED THROUGH HUB INTO ARALDITE RETAINS SPINNER.
MATCHING CONES ON HUB AND SPINNER.
F
1/4" X 1/8" HARDWOOD
40 THOU. ACETATE SHEET.
HOLE FOR AUTO-RUDDER ATTACHMENT.
G
SPAR SLIDES EASILY INTO SLOTS.
SLOTTED JIG HOLDS RIBS SO THAT SPARS CAN BE EASILY SLID INTO POSITION WITH A GOOD TIGHT FIT WITHOUT DAMAGE.
1/4" X 2" PINE.
SLOTS CUT TO EXACT THICKNESS OF THE WING RIBS.

FLYING ON BOTH SIDES of the world, long range Mustangs were equally important in the air wars over the Burmese jungles and Chinese rice fields of the Far East as they were over the industrial centres of the Reich and the oil fields of Rumania. It was the first single-engined plane based in Britain to penetrate Germany, first to reach Berlin, first to go with the heavy bombers over the Ploesti oilfields and to engage in the Anglo-Russian "shuttle" service of fighter escort.

were produced with standard fin, the dorsal extension being added later as a relief for pilots engaged on missions lasting up to eight hours. The P-51D was also scheduled to be made in Australia, but production was actually too late for participation in the war. This widely used and much respected aircraft still remains in service in remote parts of the world today and later versions were, in fact, employed by United Nations Forces in the Korean action.

AIRCRAFT DESCRIBED Number 122. Drawn by Bjorn Karlstrom

North American P-51D MUSTANG

In January, 1940, the British Air Purchasing Commission asked North American Aviation to build, on sub-contract, a Curtiss P.40 replacement. J. H. (Dutch) Kindelberger, then president of N.A.A., countered with a proposal that North American could turn out a completely new fighter. The Mustang, roughly sketched in a London hotel room by Kindelberger and J. L. Atwood, then company vice-president, was the result. The first NA-73 rolled out door 117 days later and was soon ordered into production.

Best known of the many advanced ideas incorporated into the design of the Mustang was the N.A.C.A. section laminar flow wing and the second degree curve method of fuselage streamlining, which was employed for the first time.

After acceptance of the Mustang by the U.S. for service as the P-51, wing-structure was modified to accommodate four 20 mm. cannons and fuselage guns eliminated. Then came the A-36, with four hydraulically-operated dive-brakes, one above and below each wing, for dive-bombing.

Next Mustang in the series, the F-51A, had no dive brakes or fuselage guns—only four .50-in. wing machine guns, but it lacked performance at altitude. Thus, the P-51B, was equipped with a 1,650 horsepower, Packard-built Rolls Royce Merlin engine (V-1650-3) and two-stage supercharger. A four-blade prop. replaced the three-blader used on all previous versions. First Mustang with a full-vision bubble canopy, was the P-51D, armed with six .50 machine guns in the wing, it carried a 1,000 lb. bomb under each wing. Almost 8,000 of this version were made, 280 of them supplied to the R.A.F. as the Mustang IV. As an escort fighter with a range of over 2,000 miles, it had no parallel and its performance made it a favourite of many famous fighter units. Early P-51D's

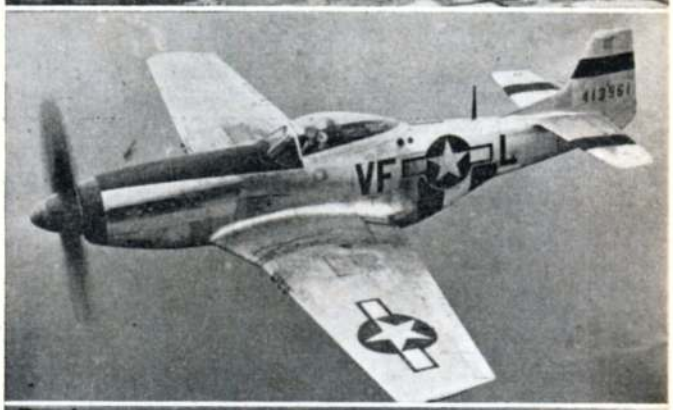

MISCELLANEOUS MARKINGS. Top: P-51D-5-NA 44-13704 marked B7-H ("H bar") with "Ferocious Frankie" in black, had a yellow nose band and spinner. Victory panel on sliding hood was red with black swastikas on white discs; anti-dazzle panel, olive drab. This a/c was personal plane for 1st/Lt. Vernon Richards. Bombs are dummies

Next P-51D-5-NA 44-13961 with dorsal fin, marked VF-L is an a/c of the 336th Fighter Squadron, 4th Fighter Group, based at Debden, Essex. Tail bands, black; anti-dazzle panel, olive drab, nose red. No upper wing band

P-51D-5-NA 44-13708 marked B7-I was from the 374th Fighter Squadron, 361st Fighter Group, Eighth Air Force. Base at the time, Bottisham, Nr. Cambridge. 75 U.S. gl. fuel tanks are slung below wings. Colours: Yellow nose; code letters and serial, black; A.E.A.F. stripes below wings and fuselage, white-black-white-black-white; national insignia Air Corps blue and "dirty" white; "Duchess of Manhattan" black; trim tab yellow outlined in black, no fin band

Bottom P-51D-15-NA marked QP-H from the 334th Fighter Squadron, 4th Fighter Group, based at Debden. Believed to be the personal aircraft of Captain Gerald E. Montgomery, who had 17½ credits, including strafing victories. Colours as above; serial and tail bands (not round fin and rudder or fuselage), black; code letters, black outlined in red; "Sizzling Liz", red outlined with black; nose band red (comes further back than VF-L); rudder, red; victories, black and white. 108 U.S. gl. tanks under wings

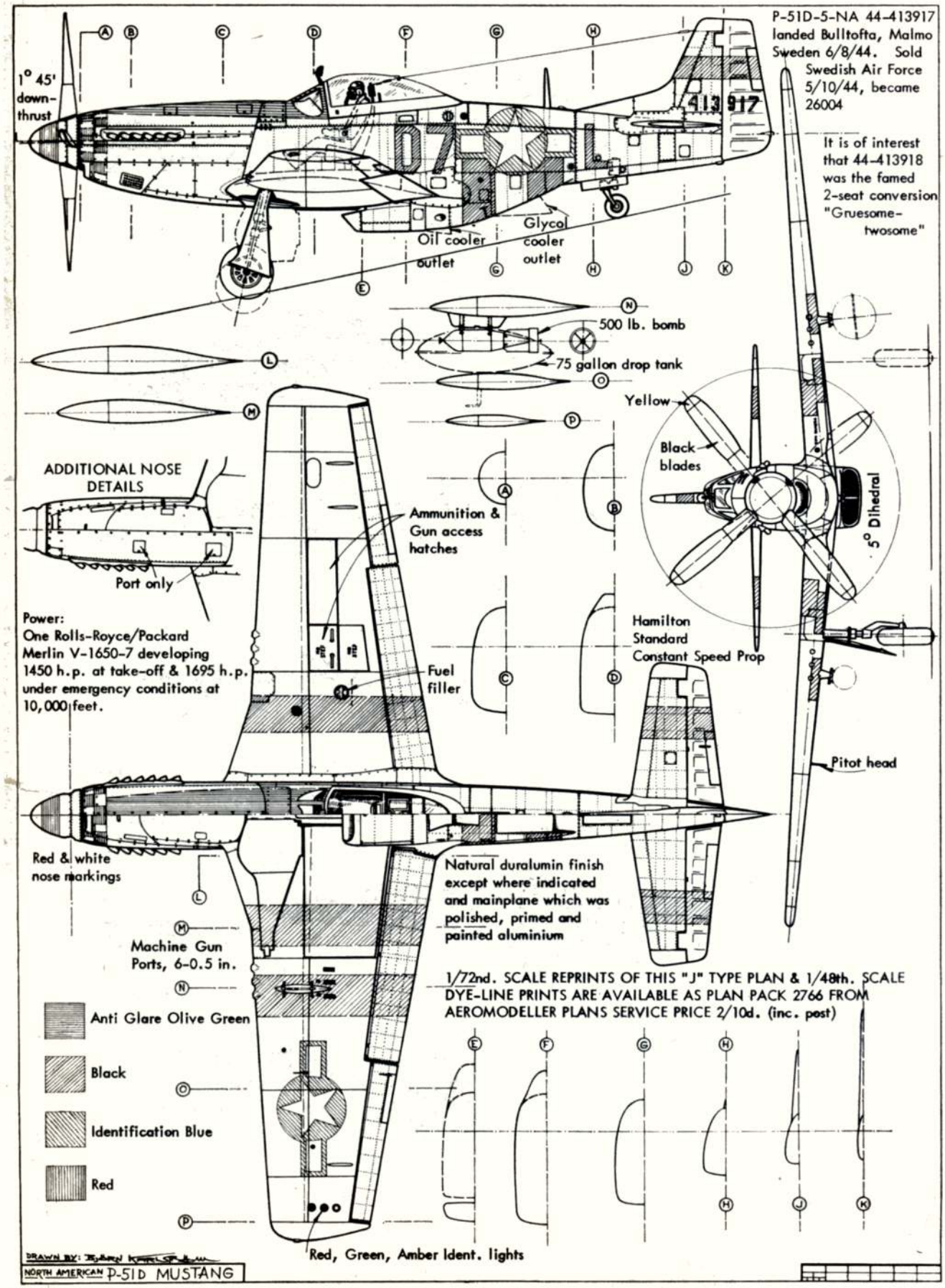
P-51D-5-NA 44-413917 landed Bulltofta, Malmo Sweden 6/8/44. Sold Swedish Air Force 5/10/44, became 26004
It is of interest that 44-413918 was the famed 2-seat conversion "Gruesome-twosome"
1° 45' down-thrust
413917
D7
Oil cooler outlet
Glycol cooler outlet
500 lb. bomb
75 gallon drop tank
Yellow
Black blades
5° Dihedral
ADDITIONAL NOSE DETAILS
Port only
Ammunition & Gun access hatches
Power:
One Rolls-Royce/Packard Merlin V-1650-7 developing 1450 h.p. at take-off & 1695 h.p. under emergency conditions at 10,000 feet.
Fuel filler
Hamilton Standard Constant Speed Prop
Pitot head
Red & white nose markings
Natural duralumin finish except where indicated and mainplane which was polished, primed and painted aluminium
Machine Gun Ports, 6-0.5 in.
1/72nd. SCALE REPRINTS OF THIS "J" TYPE PLAN & 1/48th. SCALE DYE-LINE PRINTS ARE AVAILABLE AS PLAN PACK 2766 FROM AEROMODELLER PLANS SERVICE PRICE 2/10d. (inc. post)
Anti Glare Olive Green
Black
Identification Blue
Red
Red, Green, Amber Ident. lights
DRAWN BY:
NORTH AMERICAN P-51D MUSTANG

John West reflects pensively on his achievements of 1962 after the Brighton and District M.A.C.'s annual dinner. The Hamley, Gamage and Sir John Shelley trophies, together with the Brighton Club's championship cups, make a handsome collection. Will John repeat some of these wins with his well-worn Cox 15/Dixielander combination in 1963?

MORE NEW DATES for the diary, beginning with August 25th for the **Croydon Gala** to be held at Chobham Common. Events will be the usual Open Glider, Rubber and Power, ½A Power, plus R/C Spot landing. Entry fee 2s. 6d., payable on the field, and, please note, re-entry will not be permitted. Flights to be three rounds of 3 mins with 10 secs engine run.

If Clubman had to judge from this month's postbag the best organised club in the **LONDON AREA**, he would single out **Esher M.A.C.** This group have now moved to new premises (built by Esher U.D.C. as an extension to the local Youth Centre) for twice weekly on Wednesdays and Fridays with refreshments laid on. A series of lectures and demonstrations on R/C are planned.

Their Second Annual Dinner was held at the Jolly Boatman, Hampton Court, on February 16th, where Mr. P. Wiles, Area Youth Officer, handed over a substantial cheque as a grant towards Esher's tarmac flying circle and rent of the clubroom. The evening was brightened by two variety acts and celebration of member Geoffrey Hazelwood's 21st Birthday with Champagne and cake. Congratulations! Eric Pen's *Creep*, a radio control Robot constructed from details published in April 1962 *R.C.M. & E.*, was the object of much amusement during the evening.

Events for 1963 include four club R/C comps, plus invitational rallies for F.A.I. Team Race and Stunt, at Fairmile Common on the A3 road between Esher and Chobham. First comes the Stunt event on June 30th. Entry fee is 2s. 6d. and limited to 15, which should cover the usual scan of square loopers. The F.A.I. Team Race event is scheduled for September 22nd, with top limit of 30 entries. No flying before 10 a.m. is the rule and entries should be sent to P. Wolfenden, 127 Claygate Lane, Hinckley Wood, Esher, Surrey.

During the cold weather, **Northwood M.A.C.** kept their members in Combat trim with a few rounds over an ice covered circle. Stoo Holland won the "A" event and "Baz" Bumstead the ½A fray. Croxley Moor was the scene of their Chuck and Unlimited Glider events which brought out all members. "Big Pete" Freebrey won both events. I hear tell they've a new club emblem which is to be seen at all the '63 rallies.

A quest for speed seems to have taken a hand in the activities of **Sidcup A.S**'s membership. Could this be due to missionary work by newly enrolled Pete Drewell and Ray "Gadget" Gibbs? Beside pure speed flying, they have a good selection of F.A.I. Team Race men headed by John Templeman and a 90 m.p.h. ½A racer which looks like providing some stiff competition. No serious stunt enthusiasts unfortunately, but Combat and Rat Racing are well up.

Sidcup also have a small but very keen free-flight and indoor section, while others are finding new interest in radio control. There's an indoor meeting every Wednesday evening, though as the evenings lengthen, outdoor flying will take place every other Wednesday at Avery Hill Park. Feel like joining the fun? If so, P. Noble, 32 Mottingham Road, Mottingham, S.E.9. is your contact.

Chingford M.F.C. will be at the Nats in force this year, with entries in Control line (which covers a lot of ground) and Radio Control

Contest Calendar

May 5	*Woking D.M.A.C. F/F Gala.* Chobham Common. G/R/P, ½A, Chuck Glider, Coupe d'Hiver. Pre-entry 2s. 6d. (Chuck Glider 1s. 6d.) to P. Carey, 2 Burnum Close, Knaphill, Woking, Surrey. (Event starts 10.30 a.m.).
May 12	*East Anglia Area F/F Gala.* Chobham Common. Open G/R/P, ½A, Power, Entry 2s. 6d.
	York M.A.S. Open Rally. R.A.F. Elvington, Nr. York (Tentative). Open G/R/P, Chuck Glider, Single Channel (Rudder only) R/C. Pre-entry 2s. D. Wiseman, 34 Burton Stone Lane, York. Entry on field 3s. 6d. Chuck Glider (no pre-entry) 1s. 6d.
May 19	*Caledonia Shield (S.A.A. Team event).* R.A.F. Abbotsinch. Open G/R/P, F.A.I. T/R, Combat Rat Race, R/C.
June 16	*Kirkaldy M.A.C. C/L Rally.* Beveridge Park. All classes. Field entry 2s. 6d.
	Rush Trophy Gala. Newcastle Town Moor. Open G/R/P, ½A, Combat. Pre-entry 2s. 6d. per event to F. Harvey, 91 Lancefield Ave., St. Andrews, Newcastle-on-Tyne 6.
June 30	*South of Scotland Gala.* R.A.F. Abbotsinch. Open G/R/P, ½A, F.A.I., B T/R, Combat, R/C, Chuck Glider. Pre-entry 2s. 6d. W. Douglas 3 Dudley Drive, Glasgow W.2.
	Esher C/L Stunt event. (Max. 15 entries). P. Wolfenden, 127 Claygate Lane, Hinchley Wood, Esher, Surrey.
July 21	*Clwyd Slope Soaring Meeting.* (No details).
July 28	*Lincoln Aeromodellers' Club Rally.* Wigsley, Nr. Newark. Open Rubber, (simple schedule). Pre-entry 2s. 6d. to P. Wyatt, 1 Wharfdale Drive, Fosse Est, Lincoln. Field and Re-entry 3s. 6d.
August 4	*Scottish Gala.* R.A.F. Abbotsinch. Open G/R/P. T.R.A., B, R/C. Mono control.
August 11	*Devon Rally.* Woodbury Common. G/R/P, Chuck Glider, S.M.A.E. Combat. 2s. 6d. per event.
August 25	*Croydon Gala.* Chobham Common. Open G/R/P, ½A, Power, R/C Spot Landing. Entry 2s 6d. per event.
	East Anglian Slope Soaring Rally. Ivinghoe Beacon. All glider classes 2/6d per event.
September 8	*Crawley Rally.* Great Bucksworth Farm (on A264 Road). Details to follow.
	South Midland Area Rally. Cranfield. All classes. Details to follow.
September 15	*Scottish Nationals.* R.A.F. Abbotsinch. Open G/R/P, ½A, F.A.I., B. T/R, Combat, R/C, Scale, Pre-entry 5s. to W. Douglas, 3 Dudley Drive, Glasgow, W.2.
September 22	*South Coast Gala.* All classes F/F, C/L, R/C. Venue to be announced.
	Esher, F.A.I. T/R event (Max 30 entries). P. Wolfenden, 127 Claygate Lane, Hinchley Wood, Esher, Surrey.
October 27	Wharfedale 1000 lap marathon (International Postal event).

"Don't touch the ground—whatever else you do Philpott"

Appearance points, which are awarded as an extra are encouraging production of brighter models. Dennis Day, of Wolves, has always used bright models, this Nobler with O.S. 35 uses pre-war U.S. Navy decoration style

Scale. Club chauffeur is determined to reach the destination this time after last year's fun and games with a petrol pump and a broken piston. Anything new? Well, the radio boys are out of hibernation shaped like transistors (*Yowoo*, three legs!) and complete with gadgets, plus an R/C 'copter which actually looks like the real thing. Fly? Aha, a question as yet unanswered!

It's happened! **St. Albans M.A.C.** have installed a Telly . . . and it works! Actually it was acquired during the club auction for 30s., but getting it trimmed, comes (they hope) as the last winter diversion from building. Other diversions have been a *Scalextric* car racing track and a record player. Prangs galore on the Scalextric, but not as spectacular as an off trim power model going in—yes they still remember what one looks like, even after the many fights for the right to watch telly or listen to records. Meanwhile Don Edwards has installed permanent benches in the clubroom.

New Zealander Ted Malkin, over for the World Champs, seems to shut himself off from these mundane doings on, attending to the more serious business of A/2 building. Interesting to meet chaps like Ted they say, he's joined the S.M.A.E. and intends to visit most of the comps during his stay. They also had a chap from Brazil, but he appears to have vanished—perhaps Jack Frost claimed him.

Let's go **SOUTH** now to **Southampton M.A.C.**, where **A.P.S.** designs featured in a recent concours event. First placer was A. Sanger's *Saracen* followed up by a *Merco* 35 powered *Coy Lady* by P. Adams. Third was Bill Bessent's *Veron Skyrod*. Prize for the Senior winner was a Combat Kit, while top Junior D. Chamberland received the entry fees. Flying then ensued, with a Fox C.S. powered Rat Racer at it until nearly 8 p.m., by which time pit stops were illuminated only by the moon and stars. Small wonder then that fuel was squirted everywhere but in the tank. Shortage of junior members is their major worry so a poster campaign in model shops will begin shortly in an effort to attract recruits. Modellers will receive a warm welcome and may contact the club through P. C. Scott, 48 Lyon Street, Newtown, Southampton.

Chichester M.A.C.'s club magazine "*Clear Dope*" is in its second volume, number 12, though *Clubman* does not see it regularly (hint). The first of their three leg competitions for Glider, Rubber, and Power was run off at Goodwood Racing Circuit. Junior David Glue (bet he gets his leg pulled) leads the Glider section, having scored 453.2 on three flights. With the closing of Tangmere aerodrome, the club has hopes . . .

March edition of **SOUTH EASTERN AREA's** *Seadog* newsletter reports on the third and final round of the R.T.P. series followed in earlier *Club News*. This last round which took place at Crawley on February 24th produced no great surprise. Neil Tidey of **Worthing Bald Eagles** retained his earlier advantage, bettering any previous performance with a 2:14 flight right at the end of the day. One time possible champion Tony Page was unable to better 2:31 on this occasion, but the concentrated practice by locals Pete Cameron and Bill Horton paid off, Pete holding first place for a time with 2:19. Ken Binks flew a Pole star with three bladed prop. This model was extremely fast but winding took all of 50 seconds. In face of the "Semi-Scale" appearance rules there were many borderline cases, including the winners. Some models were actually constructed on the spot, but few were entered.

Worthing Bald Eagles were understandably jubilant at the result, taking first, third, fourth, eleventh and twelfth places so perhaps this will be the subject of sequal to the Bunny Welthams produced film "The Bald Eagles Mob", now in great demand and going the rounds among **Tunbridge Wells, Crawley, Lewes** and **Brighton** clubs. This 16 mm. colour film sounds like a grand one man effort, which has a taped sound track, and depicts aeromodelling activities, interspersed with cartoons, for 40 minutes of laughter and enjoyment.

With a reasonable bank balance, **EAST ANGLIA's Debdenairs M.F.C.** have halved subscription rates to 6d. per week for Seniors and 3d for Juniors. Current communial building project, instituted as a modelling instruction course, centres round a F/F A.P.S. *Black Magic* and a control line model. Cost of plans and materials is borne by the club and when complete a "quiz contest" will decide who takes home these models—less engines, they're not *that* rich. Considering a well built model to be the best advert for their club, a "Model of the Month" is being displayed at the local model shop and a beautifully built and finished K.K. *Ladybird* with Turned Metal cowl is the current display, to be followed by an A.P.S. *Valkyrie* by a younger member.

Over twenty new models have recently appeared in **SOUTH MIDLAND'S Northampton M.A.C.**, Eddie Varley having six Combat models. But they are not quite sure whether he is an optimist or pessimist. In **Hatfield M.A.C.** there's signs of affluence in the shape of a Bedford Dormobile van which they've acquired—and it's being

Continued on page 254

CLUB NEWS continued

fitted out as a strictly for aeromodellers transport in time for the Whitsun Nats at Grantham. Unattached locals should contact the Sec. at 1 Vigors Croft, Hatfield.

To the **MIDLANDS** now where **Sutton-in-Ashfield M.F.C.** have a strong interest in Combat, using models of their own design. Others find an interest in Stunt and they have two *Noblers*, two *Mustangs*, a *Ballerina* and four *Thunderbirds*, plus Jim Pickford's old *Acheron*. Scale is not forgotten, with an A.P.S. *Vickers Viscount*, a *Spitfire*, *Nieuport* 28 and *Dornier* 215, *Pick-a-Back* coming along. An "open to visitors" picnic day is being planned for the summer, where it is hoped, a Combat competition will be run.

After so long and wide a search over many months, **Leicester M.A.C.** have left Braunstone and found a new flying ground at Bruntingthorpe Air Base, where flying sessions began on April 7th. Good show.

In the **NORTH, Baildon M.F.C.** members are developing an interest in ½A Power, using Cox T.D. .049's. Junior Robert Stott recently completed a 225 sq. in. example tipping the scales at 5½ ozs. and Jim Mosely is now waiting to test his third in a series of High Thrust Line ½A'ers, one of which was to F.A.I. specifications at 8 ozs., carried aloft on a 180 sq. in. wing. But his latest is a 250 sq. incher weighing only 5½ ozs. Jim also has a rather unusually composed T.D. 15 model, consisting of a four year old tailplane, a fin from an F.A.I. model and a wing mount from an E.T.A. 29 job. Only the wing is new. Interest is also increasing in rubber models, particularly amongst younger members, who are building variations of clubmate Tom Stoker's Northern Gala winner.

Moving **NORTH WEST** now, **Sharston D.M.S.** have their competition season in full swing, with several of their own comps for free flight and control line already behind them. Pete Lowe is current F/F champ, and Warwick Clegg leads the control liners. Their March 1st club evening was the scene of a Concours d'Elegance event, which received a sizeable entry, particularly from control line fans. First placer was Paul Massey's Enya 35 *Spitfire*. Bob Brock's Fox 35 stunter took second place and Paul Massey also collected third with his Enya 19 powered Combat model. New members always welcome at the Clubroom, Sharston Hall, Wythenshawe on Friday evening around 8 p.m.

Across country in the **NORTH EASTERN AREA, Novocastria M.A.S.** are amending arrangements for their annual Rush Trophy Gala, which will now be held on Newcastle Town Moor, due to Thornaby Aerodrome not being available. As a result of this, there will now be no team race event, though there's still C/L Combat, Open Power, Rubber and Glider, at 2s. 6d. entry fee per event. Enquiries to F. Harvey, 93 Lancefield Ave., Newcastle-on-Tyne 6. For those who did not see "Contest Calendar" last month, the date is June 16th.

Highlight of **SCOTLAND's** recent aeromodelling activities was a display at Glasgow's Kelvin Hall during the Dairy Show. Scale team racing with W.W.II types was coupled with attempted balloon busting, but pilots were seriously handicapped by lack of space within the 50 ft. wide arena and balloons remained intact. As a follow up, well known Urlan Wannop made a brief appearance on Scottish Television in which he dealt most effectively with the interviewer's ideas of "toys for boys", and test flew an indoor model before the cameras.

Pen Pals

For J. G. Burton, 263 Heath Road, Ipswich, Suffolk, a 14½ year old enthusiast interested in Radio Control, Control Line Stunt, and Combat.

Czechoslovakian model club, the Svazarm LMK at Brno wish to exchange Czechoslovakian for British model magazines with a British model club or modellers. Main interest in the Svazarm club are control line and scale models. Svazarm LMK, Brno 2, M. Juricke, chairman, Berkova 70, Brno 12, Czechoslovakia. Also for J. Navratil Zerotinovo nam 2, Olomouc, Czechoslovakia, a collector of English and American modelling magazines, who wishes to correspond in German, Russian or Czechoslovakian.

THE CLUBMAN.

S.M.A.E. Events

April 21 1st RADIO CONTROL TRIALS and *Criterium des As* C/L TRIALS	*Barkston Heath Nr. Grantham*
April 28 Astral Trophy (F.A.I. Power) Gutteridge Trophy (F.A.I. Rubber) Glider (U/R)	*Area venues*
May 19 Weston Cup (F.A.I. Rubber) S.M.A.E. Cup (F.A.I. Glider) Power (U/R)	*Area venues*
May 19 2nd RADIO CONTROL TRIALS.	

CLASSIFIED ADVERTISEMENTS

PRESS DATE for issue JUNE, 1963, APRIL 19th, 1963
ADVERTISEMENT RATES:
Private **Minimum 18 words 6/- and 4d. per extra word.**
Trade **Minimum 18 words 12/- and 8d. per extra word.**
Box Numbers to count as six words when costing.
All replies to be sent care of Advertisement Department, Model Aeronautical Press Ltd., 38 Clarendon Road, Watford, Herts.
Copy received after first post on the 19th will be held over until the next issue, unless cancelled in writing before 10th of following month.

FOR SALE

One brand new Jaguar 2.5 c.c. diesel, unrun, excellent condition, cost £3 will accept £2 5s. 0d. or near offer. Pickstock, 19 Clarence St., Runcorn.

University student giving up! New Cox Special .15, 20 min. running, £5; Torp. 19, 70s.; A.M.35, 35s.; Enya 15D, needing rebore, £2; Moodie, 252 Hexham Road, Throckley, Newcastle-on-Tyne 5.

Enya 19, 40s.; K & B 19, 80s.; (just run in); Pee-Wee, 20s.; P.A.W. 1.5, 40s.; Delphin unit, 2.5 c.c. W/C motor, exhausts, silencers, speed control, starter, in nearly complete Sea Commander, £10 (not run in); E.D. Boomerang, 30s.; Triang Rx., 15s.; Omniac, 10s.; Kinematic, 30s.; Pathfinder, 54 in. fibreglass hull plans, props and shafts, 40s.; O.K. 0.8 c.c., 20s.; Worthington, 14 Dorothy Grove, Leigh, Lancs.

A.M.35, E.D. Racer, 35s. each; D.C. Spitfire, Merlin, 22s. 6d. each; K.S.B. Timer, 15s.; books, AEROMODELLERS, plans, accessories; S.A.E. lists. 18 Woodlands Way, Ashtead, Surrey.

Reptone Tx., Rx. and Actuator, £10 10s. 0d.; Cobb "Micro 4", £3; F. R. Clockwork Actuator, 2 pawl, 25s.; E.D. Escapement, 10s.; Walker, Plot 18, Windsor Drive, Yate, Bristol.

3.5 Amco BB. 30s.; Webra Piccolo, 15s.; A.M.25 in beautiful Southerner 60, £4; Albon Spitfire in Pageboy, 30s.; spares; all V.G.C. S.A.E. to: Godfrey, 8 Chellowdene, Thornton, Liverpool.

For Sale: Graupner F.W.190 kit, new, £2 5s. 0d. Oliver Tiger engine, run in, £5 5s. 0d. 1 Borrowdale, Whickham, Newcastle on Tyne 11.

D.C. Sabre, propeller, spinner, spare needles, as new, 20s.; AEROMODELLERS Xmas 1959—August 1961, 25s. including postage. Annual 1960, 6s. All perfect condition. Peel, 78 Darcy Road, Norbury, S.W.16.

AEROMODELLERS 1956-63, Annuals 1961-58, Model Aircraft 1958-62, Flying Reviews 1958-62. Offers. Hurley, 5 Lymore Terrace, Bath.

Complete outfit; four Duramites, O.S. 8 channel Xtal Transmitter and matching relay Receiver, as good as any American equipment, £50. Sargent, Sgts. Mess, R.A.F. Kinloss, Forres, Morayshire, Scotland.

Frog 500. 5 c.c. Glowplug, bench run five minutes only. Perfect. £3 10s. 0d. Wilde, 11 The Avenue, Elworth, Sandbach, Cheshire.

Orbit 10 Tx. and relay Rx., £45. Babcock Mk. II escapement, unused, £2. AEROMODELLERS, June 1945—June 1955, offers. Watson, 23 Lancefield House, Nunhead Lane, S.E.15.

Cox TD.15, £4; Cox TD Special, £6; O.N.O. D. Sidebotham, 25 Waterloo Road, Romiley.

TRADE

Ex-Government Stop Watches, 45s. Illustrated leaflet on request. Charles Frank, 67-73 Saltmarket, Glasgow C.1.

Special Pirelli—Made expressly for Wakefield aeromodelling. Genuine top quality quarter-inch strip in 17-oz. hank direct from Italy. Remit I.M.O. value 27s. Anita Sadorin, Via Assietta 25/11, Milano, Italy.

Buying a new engine? Then get it from I.C. Engines. Every engine is backed by a full maintenance and spares service. Engines not supplied by us serviced. S.A.E. list. I.C. Engines, 619 High Road, London, N.17.

Tatone-Timers—Standard or ½A Fuel Shut-Offs and D-Ts. 30s. each post free from Dave Posner, 61b Canfield Gardens, London, N.W.6.

Send 5s. and S.A.E. for the "Phillips" bumper bundle of 1939/45 squadron insignia transfers plus R.A.F. roundels and American stars. Phillips Transfers Ltd., Woodford Green, Essex.

Special offer—limited number only—bulkhead mounting steerable nose gears complete with fittings—25s. Malcolm Douglass, 19 Byron Drive, Rawcliffe Lane, York.

Auxiliary silk parachutes. Two for 5s. 6d. incl. p. & p. E. W. Beale, 10 Mill Street, Newport Pagnell, Bucks.

BOOKS

Sailplane and Gliding—published every month. Send stamped addressed envelope for descriptive leaflet; or 3s. 4d. for current copy; or £1 for a year's subscription to British Gliding Association, Dept. "A", 19 Park Lane, London, W.1.

American Magazines. Year's subscription *Model Airplane News*, 39s. Full catalogue free. Willen Ltd., (Dept. I), 9 Drapers Gardens, London, E.C.2.

Model News (Australia)—published Bi-monthly 12s. per year sterling posted direct, covers all Australasian Aeromodelling in pictures, features and plans. 206 High Street, Coffs Harbour, N.S.W., Australia.

New and Old Aeronautical Books: English, American and Foreign. By Post only. Lists issued. Graham Scott, 84 Grosvenor Road, London, N.10.

Model-Avia, the model magazine that covers the world of model flying. Edited in French. Send for free specimen and subscription details: Model-Avia, 31 rue du Printemps, Bruxelles 5, Belgium.

PERSONAL

FRIENDSHIP, marriage, quickly arranged by post. Inexpensive service, send S.A.E. for free details. Personal Column, Falcon House Burnley.

WANTED

F & M Hercules/Midas equipment wanted, also G-String plane. Transistorised Bonners. .45 motor. Box No. 691.

Wanted: Pre-1940 SKYBIRD airdrome accessories and vehicles; also pre-war DINKY toys. R. Foster, 74-05 Kessel Street, Forest Hills 75, New York, U.S.A.

Wanted: Kemp Hawk, 0.2 c.c. diesel, any condition. Gilbert, 1046 Holderness Road, Hull, East Yorkshire.

Collector seeks ELF Twin cyl. Petrol engine, must be good cond.; details, price etc. to: Denham, 31 Tring Gardens, Romford, Essex.

Wanted: Graupner Bellaphon/polyton 10, radio control outfit. Must be in good working order and in original condition. Box No. 692.

FROG

WORLD LEADERS in PREFABRICATED KITS for over a quarter of a century ★

CONTROL LINE

A wonderful range of FOURTEEN different models—trainers, fully aerobatic stunt, built-up scale (including the SE 5A BRITISH NATIONALS WINNER) and 'Combat' scale profile models.

HORNET 21 in. span	23/3
GLADIATOR 36 in.	27/6
CHIMP 22 in.	14/9
TEMPEST 26 in.	47/6
SESA 22 in.	33/0
VANDIVER II 27 in.	16/3
TYRO 17 in.	7/0
AEROBAT 38 in.	33/0
TALISMAN 28 in.	17/6
ATTACKER 50 in.	107/6
SPITFIRE 24 in.	18/6
ME 109 24 in.	18/6
HURRICANE 24 in.	18/6
MOSQUITO 36 in.	47/6

F/F POWER

Designed for SUPER PERFORMANCE for sports flying, with accent on sturdiness and stability to ensure a long model life. Complete 'hardware' and many extras in these first-rate kits.

39" TUTOR 22/6 30" NIMROD 17/6 60" JACKDAW 119/9

RADIO CONTROL

For R/C enthusiasts there is the 60 in. span JACKDAW—the finest and most complete kit of its kind. Suitable for single- or multi-channel, JACKDAW is a proven National CONTEST WINNER!

RUBBER

Models designed with FLYABILITY in mind, plus racy good looks and simple construction. Each kit is absolutely complete and fully prefabricated.

30" MINX 10/9
36" WITCH 15/11
19" MAMBA 7/8
22" FAWN 6/6
16" DELTA 5/9

GLIDER

Go soaring with these easy-to-build gliders and sailplanes! The VENTURA is a wonderful choice for contest work—and there are six other proven designs in the range.

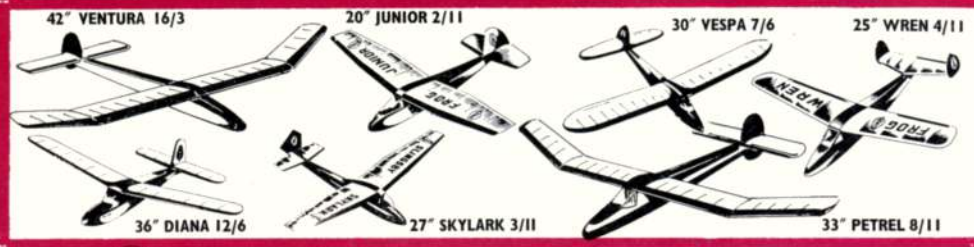

42" VENTURA 16/3
20" JUNIOR 2/11
30" VESPA 7/6
25" WREN 4/11
36" DIANA 12/6
27" SKYLARK 3/11
33" PETREL 8/11

DE LUXE SCALE

Four exciting new models in this series—and really de luxe in design quality

SENIOR SERIES

SIX 18 in. span semi-scale flyers and three 22 in. span scale models in this fully prefabricated range. Every one a winner!

21" span de-luxe
CHIPMUNK
AUSTER, PT-20 7/6
CESSNA 180 8/6

SCALE (3 models, 22" span) 5/9
FLYING (6 models, 18" span) 5/9

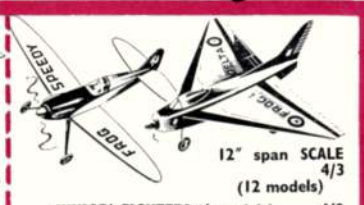

12" span SCALE 4/3
(12 models)

'JUNIOR' FIGHTERS (6 models) 4/8
'JUNIOR' SEMI-SCALE (7 models) 4/-

JUNIOR SERIES

The finest value in small flying model kits, with all parts die-cut and pre-decorated, plastic prop, wheels, etc. Dead easy to build, and guaranteed to really fly. SCALE, SEMI-SCALE and FIGHTERS.

★ In 1936 "Frog" engineered the Judge Wakefield kit, with die-cut ribs and sheet balsa and ply parts, shaped LE and TE spars, fully machined balsa propeller, plastic bushes, etc. etc.—a revolution at the time in prefabricated kit design. Since then "Frog" have continued to lead the world in this sphere. No other kits are SO COMPLETE, or represent SUCH FINE VALUE FOR MONEY.

THERE ARE OVER 60 MODELS IN THE 'FROG' FLYING MODEL RANGE

A.A.HALES LTD
26 STATION CLOSE, POTTERS BAR, MX.
Telephone Potters Bar 2226

MODEL KITS, ENGINES, ACCESSORIES.

Made and printed in Great Britain by the Croydon Times Ltd., 104 High Street, Croydon, for the Proprietors, The Model Aeronautical Press Ltd., 38 Clarendon Road, Watford, Herts. Published by the Argus Press Ltd., 19 Tudor Street, London, E.C.4, to whom all trade enquiries should be addressed. Registered at the G.P.O. for transmission by Canadian Magazine Post.

✻ CONTROL LINE or FREE FLIGHT ?

Whichever you prefer - choose

KEILKRAFT

BRITAIN'S *Top-Selling* KITS!

Designed by experts to look good and fly well.

HALO

PAA-LOAD AND GENERAL SPORTS FLYER

An up to the minute design that has proved very popular. The Halo has a very fine performance, and the kit contains die-cut parts in highest quality balsa. Wingspan 42 in. Suitable for .5 to 1.5 c.c. engines. **21/6**

SNIPE

This nice looking model is especially suitable for beginners as it is so easy to build and fly. It has been designed specially for .5 diesels and .8 glow motors and is capable of real contest performance. The kit contains die-cut parts for speedy and accurate assembly. Wingspan 40 in. **21/6**

GAUCHO

Outstanding contest model of the pylon type for 1 to 1.5 c.c. engines High quality materials and die-cut parts make it a pleasure to build. Wingspan 44 in. **23/10**

See them at the nearest model shop

FIREFLY

Stunt model with "profile" type fuselage specially designed for engines under 1 c.c. 20 in. wingspan **17/5**

PHANTOM MITE

Just about the toughest model available to the newcomer to control line flying. Features all sheet construction with wings, tailplane, fin and fuselage sides ready cut to shape. Suitable for .5 to .8 c.c. motors 16 in. span **15/6**

TALON

32 in. span combat and stunt model for 2.5 to 3.5 c.c. motors. Easy and quick to build. **27/-**

THESE KITS CONTAIN DIE-CUT PARTS FOR ACCURATE AND EASY BUILDING — also FULL SIZE PLANS and BUILDING and FLYING INSTRUCTIONS

DEMON

30 in. span class "A" team racer for motors from 1.5 to 2.5 c.c. Very complete kit contents. **31/9**

1963 KEILKRAFT HANDBOOK

Containing articles by well-known experts including Peter Chinn and Norman Butcher, and also illustrated catalogue of the huge KeilKraft range. 90 pages 2/-

Get your copy from the nearest model shop or 2/6 direct from

E. KEIL & CO. LTD., WICKFORD, ESSEX.